Analysis on the efficiency of water collection and drainage according to different installing methods of prefabricated horizontal drain (PHD) in ground improvement works

Uk Oh, Imrak Lee & Hyeonsuk Park
Daehan i.m. Co., Ltd., Korea

ABSTRACT: Soil improvement using PVD (Prefabricated Vertical Drain) is the most frequently used and very common dewatering method in large-scaled soil improvement works. Usually, sand or gravel blanket is used in order to discharge the pore water, drained from PVD. However, securing good quality natural materials is getting more difficult, because collecting natural materials causes serious environmental destruction, and rapid increase in demand causes jump in prices. This is the reasons that Prefabricated Horizontal Drains (PHDs) are being increasingly preferred to replace natural materials.
The common installation of PHD is done by aligning PHD with pre-installed PVDs stapled together with PVD on top. But when PVD is stapled on top of PHD, the pore water from PVD could be lost while it is going into the drainage channel of PHD from PVD. This loss of pore water could cause the delay of discharge, which consequently would cause the delay of settlement. This problem must be improved.
In this paper, the efficiency of water collection and drainage will be studied and analyzed with comparing different connecting methods of PVD with PHD. And based on this analysis, the ideal method and structure of PHD will be suggested.

1 INTRODUCTION

Existing PVD drainage method was carried out in the order of site preparation, installation of geotextiles for separation or reinforcement, installation of sand blanket or natural aggregates for the horizontal drainage, PVD installation, and surcharge. But recent rapidly growing demand of sand material made it difficult to secure good quality sand with a sufficient permeability. The drainage using PHD is a method which replaces sand material with Prefabricated Horizontal Drain in existing PVD consolidation method. Using PHD can dramatically decrease the quantity of sand or natural aggregates required for a project, can save construction cost, and can prevent delay in construction period.

With existing PHD materials, PHD is being installed with wrapping PVD around PHD or placing PVD on PHD (see Fig. 1). But this installing method cannot prevent the loss of discharged pore water from PVD while it is being delivered to the water channel of PHD (see Fig. 2). So the improvement in efficiency of water collection is being sought, for this loss can cause serious problem of settlement delay.

Figure 1. Jobsite with installed PHD, examples of PVD & PHD installation

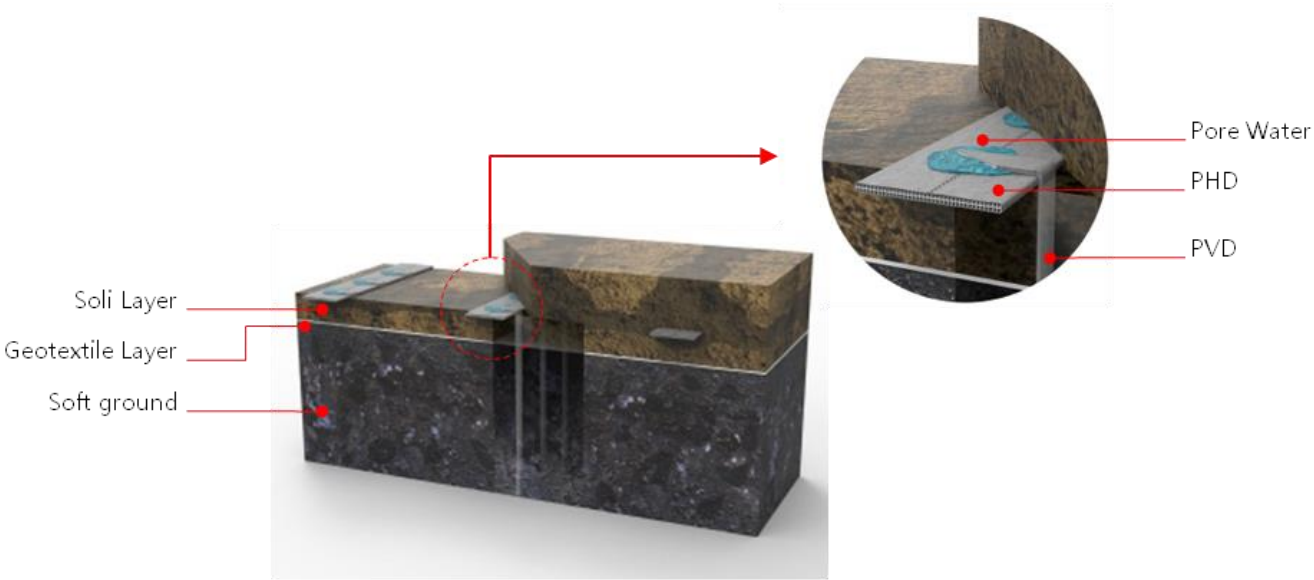

Figure 2. Drawing of water collection failure due to loss of discharged pore water

1.1 *Consideration on PHD structure of PVD inserting type*

To prevent the loss of discharged pore water while it is delivered from PVD to PHD, the structure of PVD inserting type of PHD had been considered to deliver discharged pore water directly from PVD to water channel of PHD. And this structure was evaluated indoor experiment with comparison of existing installation method.

1.2 *Method statement of installation of PHD structure of PVD inserting type*

PHD structure of PVD inserting type is as Fig. 3 and its method statement of installation is as given on Fig. 4.

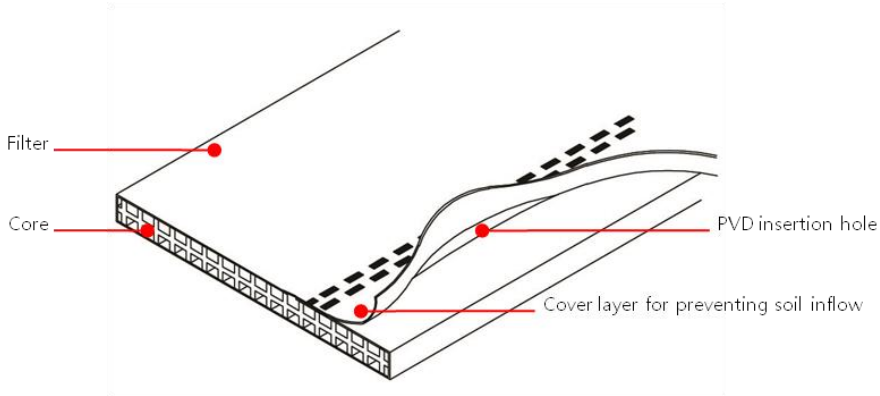

Figure 3. PHD structure of PVD inserting type

The PVD inserting type PHD is manufactured with one-sided or two-sided flap on it. And PVD is being inserted into PHD underneath this flap. After insertion, inserted area is being covered with the flap to prevent the inflow of soil particles into the water channels of PHD.

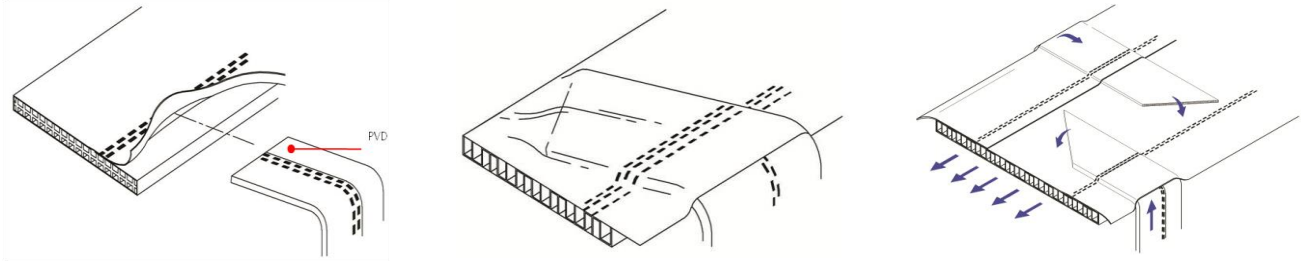

PVD inserting method One-sided insertion structure Two-sided insertion structure

Figure 4. Principle of installation of PVD inserting type PHD

2 EVALUATION OF EFFICIENCY OF WATER COLLECTION AND WATER LOSS

A reservoir with PVD inserting hole on its side for indoor experiment use had been built with Acrylic plates with thickness of 15mm as shown in Fig. 5, Fig. 6. And efficiency of water collection and water loss of a condition with placing PVD on PHD and a condition with inserting PVD into PVD inserting type PHD(one-sided) was evaluated with the reservoir.

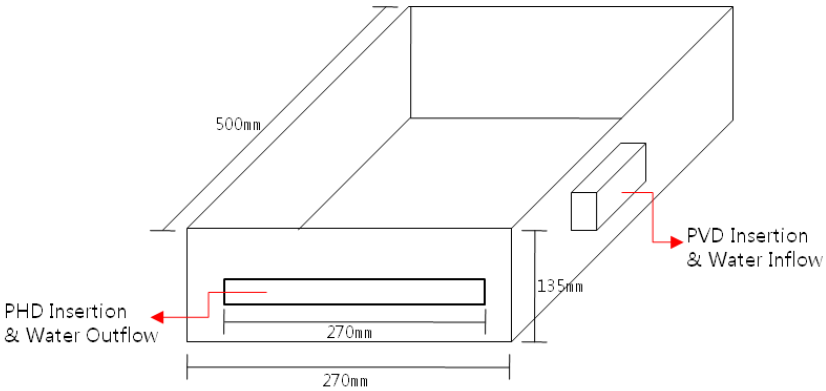

Figure 5. Diagram of indoor experiment reservoir

Figure 6. Reservoir and soil-filled reservoir

2.1 *Evaluation conditions*

Table 1. Hydraulic Gradient and quantity of water supplied

Hydraulic Gradient	1/1,000
Quantity of water supplied	100㎤/s

After filling the bottom of reservoir with soil, hydraulic gradient had been set as 1/1,000, and the total quantity of water supplied as 100cm^3/s.

2.2 *Evaluation process*

Fig. 7 PHD installation

Placing PVD on PHD | Inserting PVD into PHD | After installation

Figure 8. Pictures of PVD and PHD installation

As it is shown in Fig. 8, soil was filled and then PHD was installed on the top of the soil. Then, PVD was placed on PHD (Condition 1) and was inserted into PHD underneath the flap (Condition 2). After installation, 100cm^3/s of water had been flown through PVD and discharged quantity of water was determined to evaluate efficiency of water collection and water loss.

3 EVALUATION RESULT

Table 2. Efficiency of water collection and discharged quantity for two methods of installing PVD to PHD

Installation method	Discharged Quantity(㎤/s)	Efficiency of water collection	Water loss
Placing PVD on PHD	31.5㎤/s	31.5%	68.5%
Inserting PVD into PHD	94.5㎤/s	94.5%	5.5%

The evaluation of different installation method is shown in Table 2. In this table, the method of placing PVD on PHD showed 31.5% of efficiency of water collection (68.5% of water loss) when the other method, inserting PVD into PHD, showed 94.5% of efficiency of water collection (5.5% of water loss).

Placing PVD on PHD

Inserting PVD into PHD

Figure 9. Comparison of pore water loss with different PHD installation method

For the method that PVD placed on PHD, most of the discharged pore water that couldn't protrude into PHD had been permeated into surcharging soil layer. However, for the method of inserting PVD into PHD, it was evaluated that the discharged pore water permeated into surcharging soil layer was insignificant.

4 CONCLUSION

To improve the efficiency of water collection of existing PHD drainage method, which is being used to replace the natural aggregate horizontal drainage layer or the soft soil improvement with PVD, the new structure of PHD was introduced. And the comparison of water collection and drainage efficiency for two different installation methods evaluated by indoor experiment under the site conditions is as following:

1) For the method of placing PVD on PHD, 31.5% of pore water from PVD was delivered into water channel of PHD and was discharged through PHD. And 68.5% of pore water from PVD was lost and permeated into surcharging soil layer.

2) For the method of inserting PVD into PHD, 94.5% of pore water from PVD was delivered into water channel of PHD and was discharged through PHD. And 5.5% of pore water from PVD was lost and permeated into surcharging soil layer.

3) The installing method of inserting PVD into PHD has 3 times higher efficiency of water collection compared to the installing method of placing PVD on PHD. And this much less water loss will show better construction achievement.

4) Test installation of PHD with flap is planned to be carried out in near future, and the further study on the improvement of workability and consolidation speed of PHD with flap will be continuously carried out.