Third International Conference on Geotextiles, 1986, Vienna, Austria

YASUHARA, K. and HIRAO, K., Nishinippon Institute of Technology, Japan
MIURA, N., Saga University, **YAMANOUCHI, T.**, Kyushu Sangyo University, Japan
RYOKAI, K., Research Institute of Shimizu Construction Co. Ltd., Japan

THE USE OF GEOTEXTILE AGAINST SETTLEMENT OF SOFT CLAY UNDER CYCLIC LOADING

L'EMPLOI DE GEOTEXTILES CONTRE LE TASSEMENT DES ARGILES MOLLES SOUS CHARGE CYCLIQUE

DER EINSATZ VON GEOTEXTILIEN ZUR VERMEIDUNG VON SETZUNGEN IN WEICHEM TON UNTER ZYKLISCHER BELASTUNG

A number of low embankment highways and railways have recently been constructed on soft clay grounds in Japan. This type of embankment frequently suffers from the harmful differential settlement and rutting and the pumping of mud for subgrades which are induced by traffic loads. The small-scaled model tests were conducted at the laboratory in order to find a design method of unpaved and paved roads on soft foundations reinforced with the geotextiles and to provide a basis for the selection of a compatible embankment geometry and reinforcement layout. According to the results of model tests for adaptation of the several kinds of geotextiles, it was proved that application of a geogrid is most preferable for controlling the differential settlement of the fill on soft grounds under cyclic loading. This may be ascribed to the high rigidity of the geogrid and eminently frictional resistance force exerted between geogrid and soils.

In letzter Zeit sind eine Anzahl von Bahnstrecken und Landstraßen mit niedriger Böschung auf weichem Lehmgrund gebaut worden. Dieser Boshungstyp leidet häufig unter untershiedlicher Setzung und durch Verkehrslasten verursachtes Ausfahren und Herauspumpen von Schlamm aus dem Planum. Im Labor wurden Modellversuche in kleinen Maßstab durchgefuhrt, um eine Entwurfsmethode für ungepflasterte straßen auf mit geotextilverstärkten weichen Fundamenten zu finden und eine Grundlage für die Wahl einer verträglichen Böshungsgeometrie und Verstärkungsnordnung zu finden. Entsprechend den Ergebnissen für Modellprüfungen fur die Verwendung verschiedener Geotextilarten wurde bewiesen, daß die Anwendung von Geogitten die beste Methode ist, um unterschiedliche Setzung des Damms auf weichem Grund unter zyklischer Last ist. Dies kann der hohen Starrheit von Geogitten und der hauptsächlich reibungsbedingten Widerstandskraft zwischen und Boden zugeschrieben werden.

INTRODUCTION

Soft clay subgrades under cyclic loading sometimes exhibit the predominant deflection leading to the harmful differential settlement of pavement and the pumping of mud at subgrades. Generally speaking, clay subgrades subjected to cyclic loading including wave and wind actions is so complex that its mechanism has not been clarified yet. As one of the promising countermeasures against cyclic loading of clays, adaptation of the geotextiles has been proposed (1, 2 & 3). However, reinforcement by a geomesh has not succeded in preventing the settlement due to cyclic loading.

The present paper explores the best way how to use the geotextile for governing the settlement or the rutting of unpaved and paved roads on soft clay grounds. Three kinds of geotextiles, geomesh, geomesh pipe and geogrip were tentatively selected to investigate the mechanism of soft clay grounds under cyclic loading with a inclusion of a geotextile as well as to determine the most suitable material on this matter. Laboratory model tests will also provide a basis for the selection of a compatible geometry and reinforcement layout.

BRIEF REVIEW

As afore-mentioned, geotechnical engineers in Japan have been involved in a number of opportunites to come across the construction of earth and building structures on soft grounds. At such an opportunity, they have been forced to select an appropriate improvement method for reinforcement of the soft gound and the fill or foundation on it. The first attempt of the use of a geomesh as a category of soil improvement to reinforcement of clay subgrades for asphalt pavement was proposed by Yamanouchi (1) and thereafter was applied to improvement of bearing capacity of a soft reclaimed land.

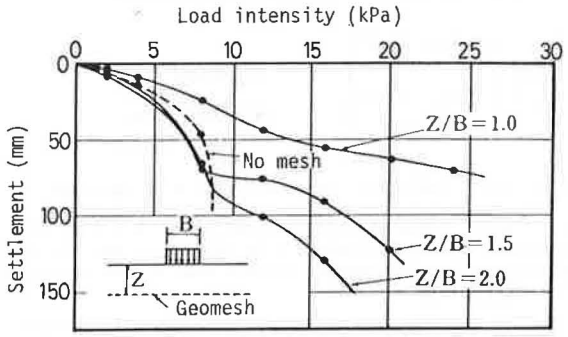

Fig. 1 Load intensity-settlement relations of soft clay-geomesh systems (Yamanouchi : 1967).

Fig. 1 shows the typical results of load intensity and settlement relation obtained from small-scaled model tests at the laboratory (2) which were aimed at improving the bearing capacity of a soft clay (G_s = 2.65, w_L = 113%, I_p = 42, natural water content w_i = 110 - 120%) by laying the geomesh over soft clay beneath the granular fill. The test results proved that if the geomesh was laid too close to the surface of clay layer the effect of geomesh must not be produced sufficiently because the surcharge load on the geomesh was too small to mobilize the shearing resistance of the geomesh against clay.

For the purpose of investigating the reinforcement effect of the geomesh on soft grounds under cyclic loading, the same kinds of model tests were carried out by Yamanouchi as shown in Fig. 2. The experimental results were given

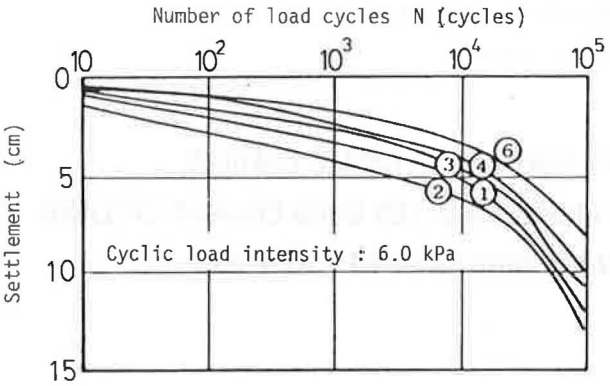

Fig. 2 Variations of settlement of model grounds

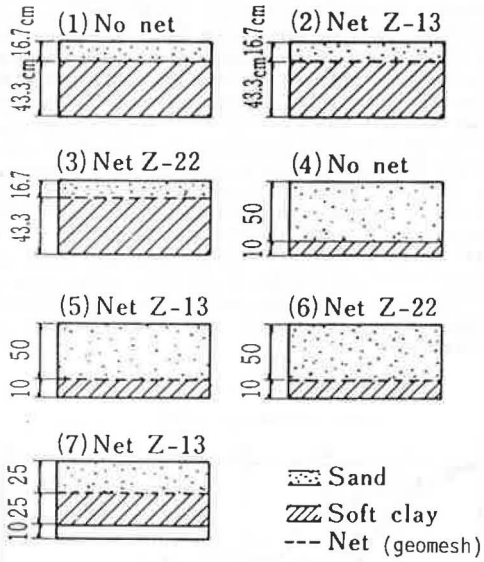

Fig. 3 Sand fill-clay layer systems with geomesh

in Fig. 2 with those on cyclic load under a 6 kPa load intensity. The load intensity in this case was chosen by taking the load spreading effect due to the pavement into consideration.

In spite of the success in improvement of soft grounds under sustained loading, adaptation of the geomesh was not available for improvement of soft grounds under cyclic loading. This was explained by Fig. 2 which showed the variations of settlement with number of load cycles in laboratory model tests. Fig. 3 illustrates the model systems of sand fill-soft clay layer involved in model foundation tests. In Fig. 2, there was not essential difference of settlement between soft grounds with and without the geomesh.

The same behaviour regarding the effect of geomesh was observed at the in-situ vehicle running test over an embankment on soft clay ground at the field (4). Figs. 4 (a) and (b) summarize the results of vehicle running tests over the soft Ariake clay ground. This field tests was carried out to make sure of the effectiveness of quick-lime stabilized layer, including the use of geomesh, against settlement of soft clay subjected to traffic loads. It is understood from Fig. 4 (b), the use of geomesh is not the advantageous side at least for settlement control of soft grounds in comparison with the other stabilization methods.

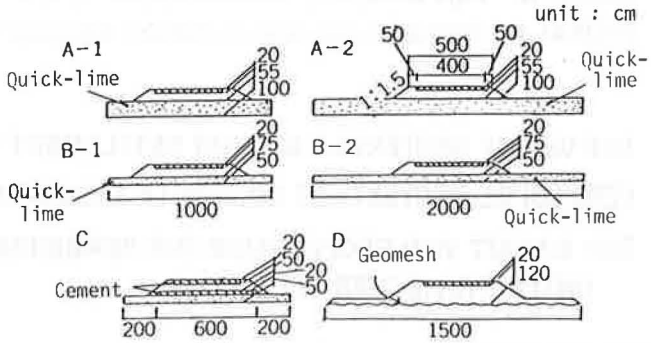

Fig. 4 (a) Cross section of model embankment tests

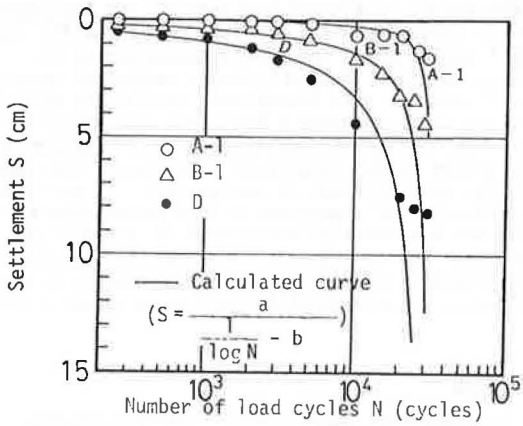

Fig. 4 (b) Variations of settlement

Fig. 4 Vehicle running tests on soft clay ground (Kohoku bypath, national route 34, Saga pref., Japan)

Considering the brief review on the use of the geomesh to improvement of soft clay grounds, it is suggested that another new adaptation method for development of the new material will be anticipated to proposed for reinforcement of soft grounds particularly under cyclic loading.

CONCEPT OF SETTLEMENT CONTROL BY GEOTEXTILES

Settlement constrainment of soft clay grounds by means of the geotextile is expected by both the high rigidity of the material and the frictional resistance between soils and material. The former is concerned with surpression of compression and consolidation and the latter is related to constrainement of lateral displacement of the ground. In terms of this consideration, it is concluded that a geotextile used for the purpose of settlement control at soft grounds should be required to have the following properties:

1) High rigidity for smooth distribution of the applied stress toward the depth
2) High tensile strength to follow the large deformation and deflection
3) Strong frictional resistance to constrain the lateral displacement

To satisfy these requirements, the multiple laying of the

geotextile with the high rigidity and frictional resistance force is reccomended because the structural effect may be developed in the soil-geotextile systems as shown in Fig. 4. Therefore, producing the cubical form of the geotextile as shownin Fig. 4 is most preferable for reinforcement of the soft ground judging from both viewpoints ofsettlement and bearing capacity.

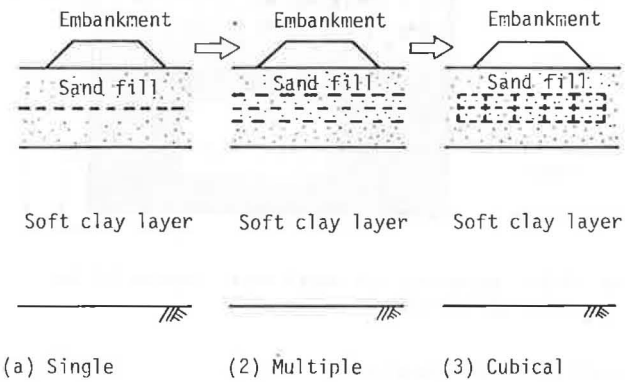

Fig. 4 From plane to cubical laying of geotextile

TEST PROGRAM

To detect a geotextile suitable for reinforcement of soft clay grounds under cyclic loading, additional model tests were carried out at the laboratory. The test program shown in Table 1 is divided into two types I and II which are schemed to simulate the paved and unpaved roads, respectively. Index properties of clay used for soft ground are listed in Table 2.

SERIES I : The apparatus for the model test series I is the box type (100 cm in height, 100 cm in depth and 50 cm in width) as shown in Fig. 5 , made of the lucite supported by the steel frame and is equipped by the markers to observe the movement of soil particles. The surface of lucite is drawn by the painted cross sectional straight line and is applied by the silicone grease to lubricate the both sides of the lucite box and to reduce the friction between lucite and clay. The model clay ground is produced as a block of clay with approximate 20 cm in depth by consolidation from a slurry which is sandwitched by the upper and lower sand layers.

As metioned previously, the geotextile is laid horizontally either over the surface of clay layer or among the upper sand fill with 17 cm in height, as illustrated in Fig.5 . Mechanical properties of the geotextiles involved in tests are summarized in Table 3.

Once the clay has been consolidated by a surface load to the required extent for 30 days, the loading platen is removed and the clay allowed to swell back until an equilibrium state is achieved. After this process, a cyclic load with frequency of 0.1 Hz. is applied to the surface of the upper sand fill over the period of 130000 cycles. For the main series of tests, the width of the rigid footing plate was 30 cm and 15 cm.

The loading sequence of each test is schematically illustrated in Fig. 5 together with that in the test series II. The vertical displacement and the lateral heave are measured by means of the dial gauges installed on the surface of fill. Besides, the vertical earth pressure and pore-water pressure also monitored during both preconsolidation and cyclic loading processes. The locations of the pressure cells and the manometers are shown in Fig. 5 .

Table 1 Summary of laboratory model tests on use of geotextile

Test series	Test No.	Material	σ_{vo} (kPa)	$\Delta\sigma_r$ (kPa)	N (cycles)	f (Hz.)
I (Unpaved)	D	Geogrid	10	10	130000	0.1
	D-1	"	"	40	"	"
	E	Geomesh-pipe	"	10	"	"
	F	"	"	"	"	"
	G	No	"	"	"	"
II (Paved)	Y	No	5.1	200	200000	0.18
	Z	Gogrid	"	"	"	"

Table 2 Index properties of soft clay used in tests

Index		Ariake clay I	Ariake clay II
Specific gravity	G_s	2.46	2.63
Liquid limit	w_L (%)	108	117
Plasticity index	I_p	76	78

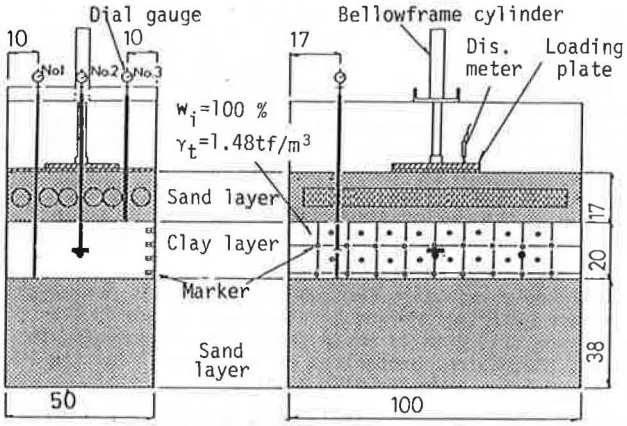

Fig. 5 (a) Apparatus for model tests (series I for unpaved road)

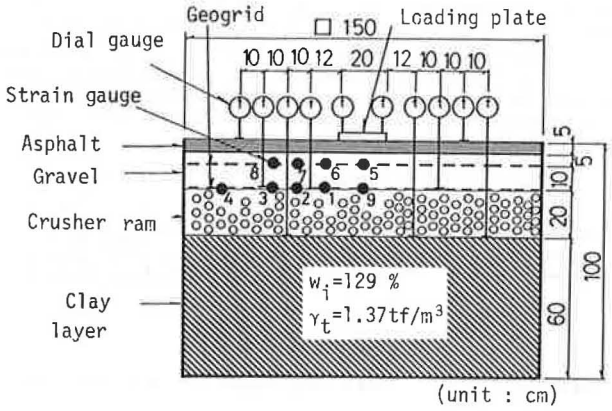

Fig. 5 (b) Apparatus for model tests (series II for paved road)

Fig. 5 Apparatuses for small-scaled model tests at laboratory

Table 3 Mechanical properties of geotextiles

Product	Tesile strength (N/m)		Pore size (mm)		Porosity (Open area) (%)
	Warp	Weft	Warp	Weft	
Geogrid (TENSAR,SS2)	15000	32000	28	40	-
Geomesh (NETLON,Z-31)	7000	7000	10	10	-
Geomesh-pipe (NETRON, PDS-50)	—	—	—	—	10

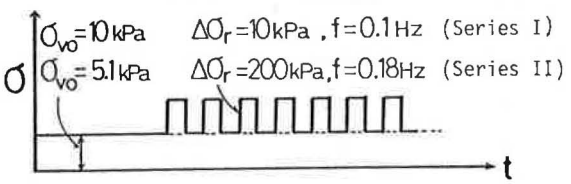

Fig. 6 Loading sequence for both tests

SERIES II : Different from the test series I for unpaved roads, the series II is aimed at simulating the behaviour of paved roads under cyclic loading. The apparatus for model tests is made of the concrete box (150 cm in length, 150 cm in width & 100 cm in depth)as illustrated in Fig. 5 (a). The clay layer with 60 cm in thickness is covered by the simulated asphalt pavement. Two layer geogrids are placed over the crusher ram layer (20 cm in thickness) and among the granular arrangement crusher stone layer (15 cm in thickness), respectively. Vertical displacement of the surface of a model pavement are measured by each dial gauge which is attached over the surfaces of pavement, crusher stone layer and crusher ram layer through the iron bars, as shown in Fig. 5 (b). The loading sequence is slightly different from the series I. That is, successive to the preconsolidation pressure with 5.1 kPa, the modelized ground is subjected to cyclic loading with 200 kPa in incremental cyclic load intensity and 0.18 Hz. in frequency of cyclic loading. The number of load application is

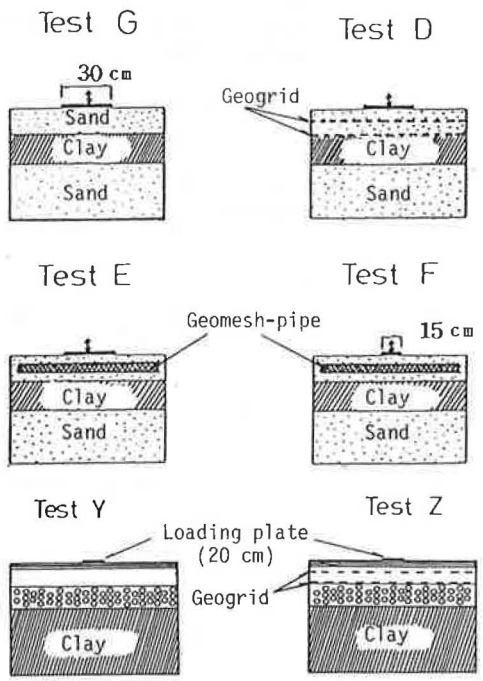

Fig. 7 Systems of soft clay ground-geotextiles in laboratory model tests

200000 cycles for each test.

TEST RESULTS

Experiments for Unpaved Road

(1) Vertical displacement : The vertical resudual displacement, h^p, observed in model tests for an unpaved road reinforced with and without geotextiles at each removal of applied cyclic load, $\Delta\sigma_r$, is plotted against the number of load cycles in Fig. 8. According to the com-

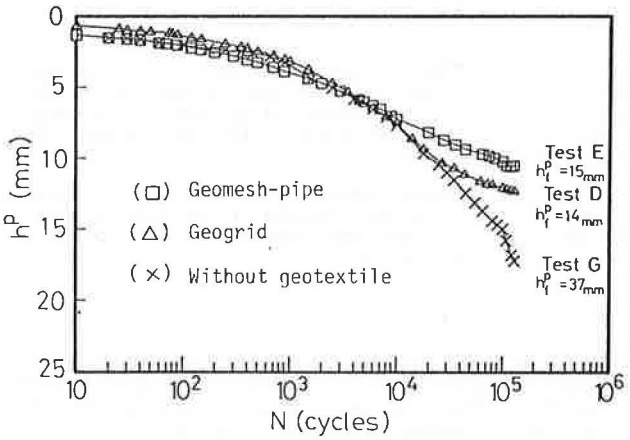

Fig. 8 Variations of vertical displacement of model grounds with and without geotextile under cyclic loading

parison of the variations of residual displacement versus the number of load cycles, settlement of soft grounds reinforced with a geogrid tends to converge at a specific number of load cycle. In other words, there is the point of inflection of settlement curve. On the contrary, settlement of the soft ground gradually becomes eminent in the region of the large number of load cycle, while all the settlement curves trace almost the same line at the beginning of cyclic loading. Therefore, it is concluded that the function of geotextile reinforcement is fulfilled only when the soil-geotextile system experineces the large dispacement.

From a comparison of the converged settlement of each model test due to cyclic loading which is deduced by the extrapolation method (5) as indicated in Fig. 8, the reinforcement with the geogrid is most promising for restricting settlement of unpaved roads on soft clay ground. This trend may be attributed to the stress re-distribution and its reduction due to the effect of so called "restrained layer" produced between granular fill and geotextile (3).

(2) Deformation behaviour : Deformation behaviour of model ground is illustrated in Fig. 9. The model ground right below the loading surface without geotextiles is apt to deform vertically and hence this suugests that settlement of the soft ground under cyclic loading should be consolidative. The effecto of reinforcement of the pavement with geogrid on the soft ground is to diminish the settlement and to govern the lateral displacement.

The variations of the vertical earth pressure measured at the mid-place of clay layer with the number of load cycle are shown in Fig. 10. The earth pressure in clay layer without geotextile is on the increase with the number of load cycles particularly at the later portion of curves of residual displacement versus the number of load cycles. This is the result due to no other than the fact cyclic load is distributed toward the depth of model ground because the restrainment is developed by the frictional resistance accompanied by large deformation. In these cases, particularly, one of the reasons why the vertical earth pressure was time-dependentduring cyclic loading as can be seen in Fig. 10 might be relevant to the lateral confinement of the apparatus.

Experiments for Paved Road

Let us consider the effect of the geogrid buried in the crushed stone for mechanical stabilization. The variations of rsidual displacement of the loading surface of paved model ground with the geogrid are illustrated in Fig. 11. It is made clear from the comparison of the settlement versus the the number of load cycles relation with and without geogrid the layout of geogrid is effective for controlling settlement due to cyclic loading. However, a difference does not seem to be so eminent that we are not sure of the usefulness of the geogrid to settlement control at the soft ground. This tendency is almost the same as seen in the model test to simulate the unpaved road (see Fig. 6). It is, therefore, concluded that the effect of a geogrid against residual setttlement or deformation of the ground becomes larger because both soil and geogrid should behave as if they were incorporated each other.

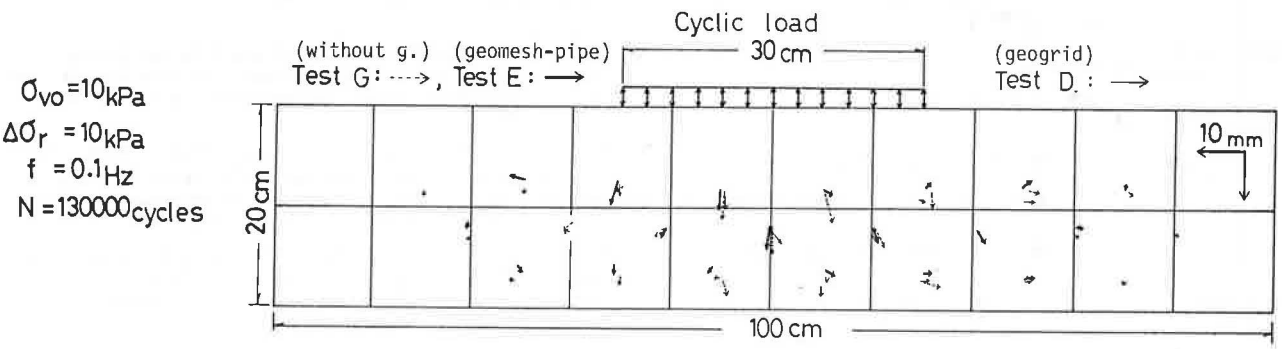

Fig. 9 Deformation behaviour of model grounds with and without geotextiles for unpaved roads

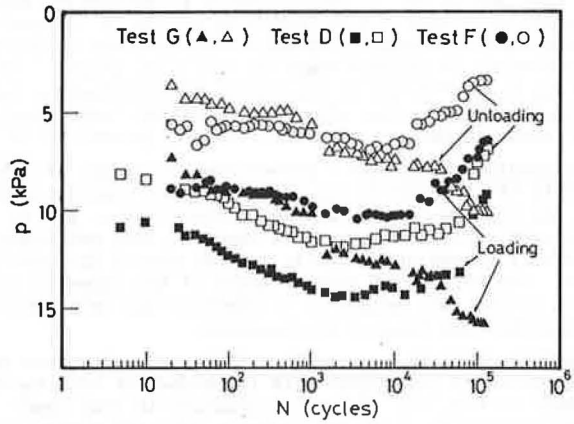

Fig. 10 Variations of vertical earth pressure with number of load cycles

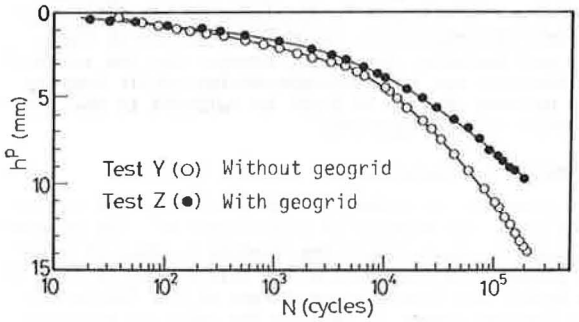

Fig. 11 Variations of vertical displacement of model ground for paved road with and without geogrid

The distribution of settlement dsplacement in model-paved grounds accompanied by cyclic loading is illustrated in Fig. 12. Settlement of the paved road under cyclic loading is rather consolidative not only without the geogrid but also with the geogrid, though the geogrid plays a role in reducing the settlement of soft grounds.

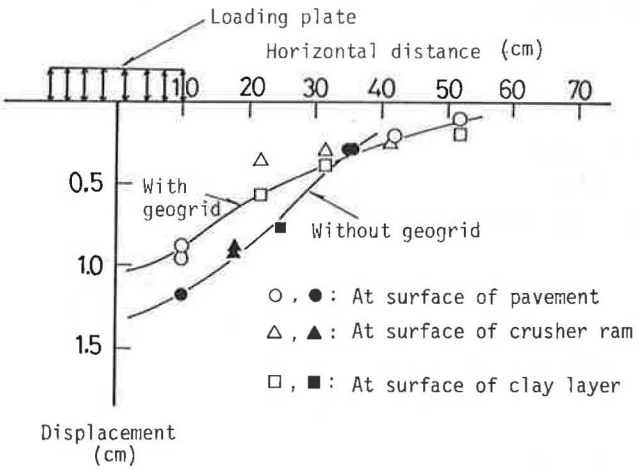

Fig. 12 Distribution of vertical displacement of model grounds with and without geogrid at N = 10^5 cycles

CONCLUSION

By simplifying the problems of cyclic loading on a layer of fill on soft clay ground, it has proved possible to identify the essential differences in behaviour between systems with and without geogrid at the base of sand fill and pavement, by means of small-scaled tests in the laboratory.

The significantly better performance of the systems incorporating a geogrid has been shown to be the results of the reinforcing action of the geogrid, which interlocks with the sand fill or crusher stone and shows the frictional resistance developed at the base of the fill or pavement.

The restrained effect by tensile or pull-out resistance seems to be more exerted in the geogrid than in the geomesh. Subsequently, settlement of grounds with a geogrid is less than with a geomesh due to this restrained effect between fill and geogrid.

Presumably, settlement control effect of soft clay ground depends not only upon the rigidity of the material but also upon the frictional resistance among material, granular fill and soft clay.

REFERENCES

1) Yamanouchi, T.(1967) : Structural effect of restraint layer on subgrade of low bearing capacity in flexible pavement, Proc. 2nd Intnl. Conf. Structural Design of Asphalt Pavement, Ann Arbor, pp. 381 - 389.

2) Yamanouchi, T. (1972) : Experimental study on the improvement of the bearing capacity of soft ground by laying resinous net, Proc. Symp. "Foundations on Interbedded sands", Perth, pp. 102 - 108.

3) Yamanouchi, T. et al. (1978) : A new technique of lime stabilisation of soft clay, Proc. Symp. "Soil Reinforcing and Stabilising Technique", Sydney, pp. 531 - 541.

4) Yamanouchi, T. and K. Yasuhara (1975) : Settlement of clay subgrades after opening to traffic, Proc. 2nd Australia and New Zealand Conf. on Geomechnanics, Vol. 1, pp. 115 - 120.

5) Yasuhara, K. et al. (1983) : Approximate prediction of soil deformation uder drained-repeated loading, Soils and Foundations, Vol. 23, No. 3, pp.13 - 25.

6) Yasuhara, K. et al. (1983) : Settlement of clay subgrades under cyclic loading, Proc. 7th Asian Reg. Conf. SMFE, Vol. 2, pp.170 - 175.

7) Brown, S. F. (1982) : Use of non-woven fabrics in permanent road pavements, Proc. Instn Civ. Engrs, Part 2, Vol. 73, pp. 541 - 563.

8) Jewell, R. A. (1982) : A limit equilibrium design method for reinforced embankments on soft foundations, Proc. 2nd Intn'l. Conf. Geotextiles, Vol. III, pp. 671 - 676.

9) Milligan, G. W. E. and J. P. Love (1984) : Model testing of geogrids under an aggregate layer on soft ground, Proc. Symp. on "Polymer Grid Reinforcement in Civil Engineering", Paper No. 4.2.

10) Giroud, J. P. et al. (1984) : Design and unpaved roads and trafficked areas with geogrids, Proc. Symp. on "Polymergrid Reinforcement in Civil Engineering", Paper No. 4.1.