Third International Conference on Geotextiles, 1986, Vienna, Austria

DELMAS, PH. and SOYEZ, B., Laboratoire Central des Ponts et Chaussées, Paris, France
LENGLET, J., Laboratoire Régional des Ponts et Chaussées, St. Quentin, France
PUECH, J. P. and BUFFARD, J. Y., Scétauroute, France

EXPERIMENTAL PUNCTURING OF A REINFORCED EMBANKMENT OVER AN INDUSTRIAL WASTE SITE

DURCHSTANZEN EINER GEOTEXTILVERSTÄRKTEN SCHÜTTUNG AUF EINER INDUSTRIEABFALLDEPONIE

POINCONNEMENT EXPERIMENTAL D'UN REMBLAI RENFORCE PAR GEOTEXTILES SUR UNE DECHARGE INDUSTRIELLE

This paper deals with a highway embankment to be constructed on an industrial waste disposal area. The highly compressible waste deposit is 6 meters thick and underlied by a 3 meters thick peat layer. The chosen solution associates the punching of a geotextile reinforced embankment and an unloading by a partial substitution by a light-weight material.

Due to the great heterogeneity of the waste, it was decided with the Highway Company to build a 5 meters high reinforced test embankment, to check the accuracy of the technical solution.

INTRODUCTION

Confronted with the difficult problem of crossing by an embankment disposal areas of compressible and heterogenous industrial wastes, the engineer is led to proposing innovative solutions due to the inadequacy of traditional techniques. Within the scope of the Aulnois site which is the subject of this paper, the combination of geotextiles and of an ultra-light material turned out to be technically and economically wise. Due to the novelty of the proposed method, an experimental structure was built, in order to confirm its feasibility and to supply the parameters needed for final design.

I - DESCRIPTION OF SITE AND PROJECT

I.1 - General

The A26 motorway, under construction between Calais and Reims, crosses north of Laon an alluvial area constituted of compressible soils of an organic nature, about 3 meters thick. This geotechnical problem is locally complicated by the presence on the alignment of a settling pond for mud washed from sugar beets. Over an area 320 meters long, the vertical alignment of the project sets the pavement 70 cm above the present level of the wastes, the average thickness of which is 6 m in the axis of the motorway (Fig. 1).

The washed mud may be compared to more or less sandy loams, even to muds containing a few vegetal debris.

The geotechnical characteristics of the wastes, more favorable near the dikes enclosing the pond, are the consequence of the method of discharging the mud into water, which induces a segregation of the particles. The more sandy elements settle on the edge of the pond, near the discharge

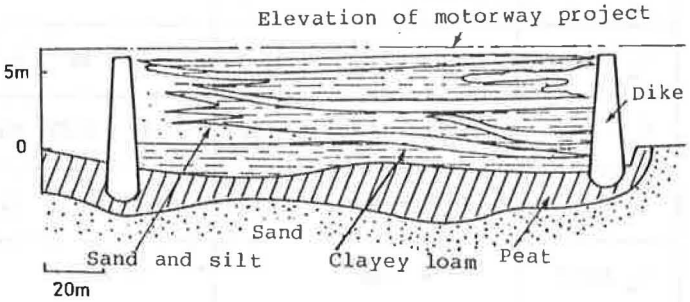

Fig. 1 - Geological profile of the project

points, while the finer materials tend to accumulate in the center of the pond. The heterogeneity of the site is also revealed by the presence of clayey lenses within the peripheral sandy phase.

Lastly, it will be noted that the level of the dikes has risen gradually as the site was exploited, due to the recovery of the sandy elements deposited during the preceding filling periods. This process is itself a probable cause of the formation of additional compressible pockets on the periphery of the pond. Table I consolidates the extreme geotechnical characteristics of the deposit materials and of the organic underlying layer (as deduced from several investigation surveys conducted by the St. Quentin L.R.P.C.), as well as the values used for the calculations.

I.2 - Selected solution

Various technically feasible solutions (moving the alignment, "low" viaduct, total punching, embankment on piles, etc.) were studied, to which the solution of a partial punching in conjunction with an unloading of the embankment was preferred, for economic reasons.

This solution rests on the following theoretical phasing (Fig. 2):

- partial punching aimed at reducing considerably the height of compressible soil under the final embankment,
- preloading in order to provide partial consolidation of the remaining soft soil,
- unloading of the embankment to an elevation permitting the construction of a light embankment to support the pavement at its final level. This unloading has also the advantage of causing an

TABLE I - GEOTECHNICAL CHARACTERISTICS OF SOILS

	Periphery of pond		Center of pond	
Depth	0-6 m (wastes)	6-9 m (peat)	0-6 m (wastes)	6-9 m (peat)
γ (kN/m^3)	12.9 - 19.9	9.8 - 11.5	12.9 - 18.8 (16)	9.4 - 10.9
ω (%)	17.5 - 97.7	206 - 447	21.5 - 101	245 - 440
e_0	0.653 - 2.22 (1.65)	4.48 - 6.3 (5.6)	0.745 - 2.29 (1.72)	3.11 - 6.6 (4.82)
σ'_c (kPa)	26 - 48 (48)	35 - 50 (48)	21 - 48 (31)	29 - 46 (46)
C_s	0.005 - 0.038 (0.032)	0.143 - 0.277 (0.143)	0.010 - 0.035 (0.032)	0.065 - 0.133 (0 065)
C_c	0.003 - 0.846 (0.658)	2.67 - 4.12 (3.65)	0.632 - 0.841 (0 632)	3.3 - 4.74 (3.3)
c_u (kPa)	6 - 28	25 - 30	7 - 19 (14)	28 - 36 (30)
C' (kPa)*	2 - 11	7	4 - 6	-
φ' (°)*	34 - 42	42	32 - 42	-

* in sandy areas
( ) the figures in parentheses were used for design.

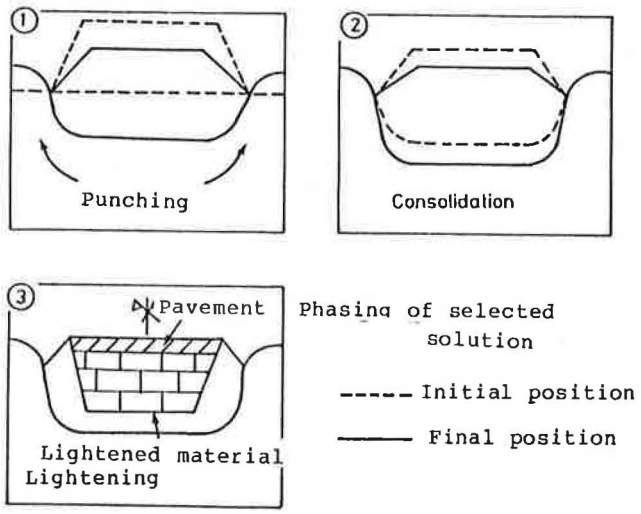

Fig. 2 - Proposed construction phasing

artificial "ageing" of the underlying compressible soil from the standpoint of secondary consolidation, in accordance with the principle set forth by Bjerrum [1].

The design of such a solution, already normally difficult, was complicated in the present case by the absence of representative data regarding the creep characteristics of the wastes. The available parameters on this subject had in fact been derived from laboratory tests from which it has been proven (Mieussens and others [2]) that they do not reflect reality in the case of compressible thicknesses greater than 1 m. Moreover, due to the heterogeneity of the site, it also appeared desirable to "reset" the parameters of primary consolidation.

For all these reasons and on the initiative of SCETAUROUTE, the project contractor, it was decided to build an experimental embankment in order to refine the final design, especially concerning the following points:

- the actual feasibility of the controlled punching and the height of the embankment to be built in order to reach the desired punching depth (2 m),
- the design of the reinforcing textiles for the purpose of assuring:
  . the integrity of the embankment during punching,
  . its stability during the next consolidation phases,

- the rate of consolidation corresponding to a 1 m magnitude of the settlements to be reached in one year at most,
- the height of the light material to be placed in the terminal construction phase.

II - THE EXPERIMENTAL EMBANKMENT

II.1 - General

Considering the available technical data, it seemed judicious to place the experimental structure in the central part of the pond, presupposed from experience to be more compressible and relatively homogenous according to the investigation. For practical reasons, the structure was built outside of the future right-of-way of the motorway, but near the jobsite road and perpendicularly thereto. In order to limit the volume of the structure, the slope of the side banks was arbitrarily set at tg β = 2/3; in the terminal part, the selected slope was purposely reduced to tg β = 1/3. This was done in order that the longitudinal reinforcements necessary to the actual stability of the extremity should disturb as little as possible the action of the transverse reinforcements which will be the only ones to be placed on the straight section of the final structure (Fig. 3).

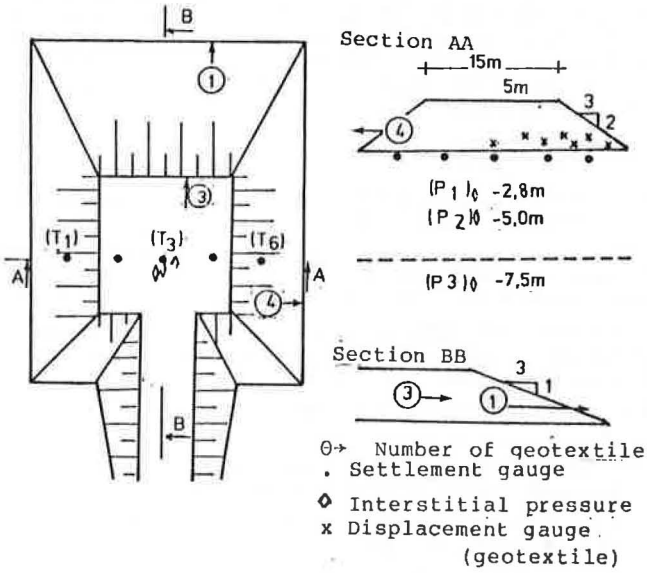

Fig. 3 - Geometry of the structure and location of apparatus

II.2 - Design

II.2.1 - Height of material to be placed

An initial estimate of 5 m for the height H_R of the material to be placed to obtain an "instantaneous" punching of 2 m was made on the basis of a calculation of the ultimate bearing capacity against failure of an embankment of infinite length concerning the layer of wastes, and having already penetrated to this depth in the wastes. This methodology, while rough, seemed to us adequate, however, as a starting point for experimentation.

Figure 3 shows the final geometry of the project, on the basis of a platform with a square head, 15 m x 15 m, and of the slopes given above.

II.2.2 - Design of the reinforcement

The choice of the material was prescribed due to the existence in the contractor's stocks of a sufficient quantity for the needs of the experiment of a woven polypropylene geotextile having the characteristics given in Table II below:

TABLE II - Characteristics of the geotextile

Item	Longitud. direction	Transv. direction
Tensile capacity (kN/m)	200	34
Strain ε_r at maximum stress (%)	11	6.5
Secant modulus (kN/m)	1800	500
Porosity measurement (O_{95} µm)	< 200	

The above values should be noted concerning the strong anisotropy of the material, which justifies a priori the small influence of the longitudinal textiles on the behaviour of the transverse sheets which are the subject of the study. It will also be observed that the various layers are laid edge to edge without overlap.

In the light of present experiences in the field of polymers, it seemed reasonable to select, for a one-year period of the structure (consolidation time of the supporting ground), an allowable tensile capacity of 25% in relation to the failure load, and this in order to take into account the creep characteristics of the polypropylene. In the case of our material, the allowable tensile capacity is thus 40 kN/m.

The available material constituting the embankment was a sand with a grading of (0/0.0315) and an internal friction angle φ' = 25°. The sand-geotextile contact was characterized by a friction angle φg of 14° (tg φg = 0.24).

II.2.2 a - Principles of structure design

The various failure mechanisms of embankments on compressible ground strengthened by geotextiles have been the subject of numerous studies to date (Haliburton and others [3]). These are usually characterized by:

- the risk of a local failure of the foundation soil by circular sliding,
- the risk of failure of the geotextile during the overall punching in the foundation soil of the rigidified embankment body.

More recently, some authors (Christopher and Holtz [4], Delmas and others [5]) proposed study methodologies emphasizing the need to calculate

the strain of the textile, in the two failure mechanisms quoted above.

. Circular failure

The relevant design method associates a calculation to the limit equilibrium with respect to the soil and a calculation of the stresses in the reinforcements, based on the local equilibrium equations of each layer and the overall equilibrium equations of the moving block. The development of stresses in the reinforcements is assumed to be directly related to the displacement of the moving mass (Fig. 4) (Delmas and others [6]). Within the considered deformation range, the following laws are used:

- for the textile, a law of behaviour in linear elastic traction,
- for the soil-textile interface, a linear elastoplastic law.

At the end of the calculations, the transverse fault calculated between the two blocks is checked to ascertain that it remains acceptable for the structure.

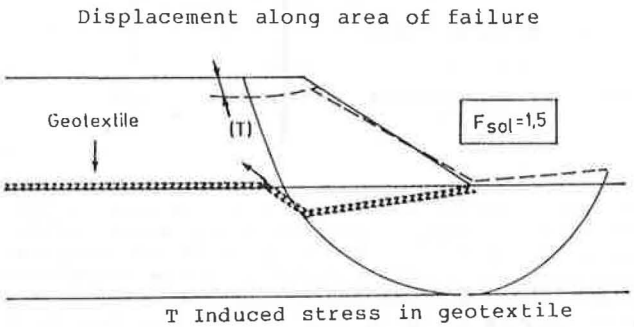

Fig. 4 - Calculation principle of displacement method

. Rigidification of the embankment

Besides their paramount influence on stability with respect to circular failure, the geotextiles placed at the base of the embankment have an additional rigidification effect on the structure. It may be assumed that this influences the calculation of the actual punching. On the other hand, one must therefore evaluate the additional stresses induced in the textiles during punching and related in a specific manner to rigidification.

Such evaluation appears difficult in the present state of knowledge, considering the insufficiency of the models available to simulate punching. Rowe's work (1984), based on the finite element method, constitutes an interesting approach to this problem; however, the charts published to date did not allow us to treat our particular case.

For all these reasons, we limited outselves to take only circular failure into account design the textiles of the experimental embankment.

II.2.2 b - Selected arrangement

The calculations made in accordance with the principles stated above have yielded the following results (Table III):

TABLE III - Results of design calculations

Slope	3/1 (end of embankment)		3/2 (transverse direction)	
Safety coefficient on the soil	1.3	1.5	1.3	1.5
Number of layers	3	4	4	5

Considering the experimental character of the structure, and especially the magnitude of the planned monitoring, it was decided to build the embankment with 4 layers in the transverse sense (3/2 slope) and 3 layers at the end (slope 3/1) (Fig. 3). In fact, it may be observed on this figure that only one of the 3 longitudinal layers was positioned as far as the toe of the slope, in order to check the validity of the calculation by testing for underdesigning of the reinforcement. A spacing of 40 cm was provided between each layer, so as to facilitate placement.

II.3 - Instrumentation

The planned instrumentation is responsive to the following two objectives:

- monitor the behaviour of the embankment, of the foundation soil and of the reinforcements during the construction and punching phase,
- furnish the data needed to design the final structure, especially the consolidation parameters of the supporting soil.

The instrumentation includes (Fig. 3):

- 3 piezometric cells placed under the center of the embankment in the wastes layer at a depth of 2.8 m and 5 m/NG and in the peat at 7.5 m,
- 5 surface settlement gauges distributed over a standard cross-section,
- 8 deformation gauges distributed over a half-cross-section on the lowest two layers.

For reasons of durability and watertightness, the monitoring of textile deformations was performed by linear inductive displacement gauges specially adapted for this type of use; they were preferred to a traditional system of glued gauges.

III - OBSERVATIONS AND INTERPRETATION OF THE MEASUREMENTS

III.1 - Observations

After the first layer was placed directly over the settling wastes during a period of frost, it was possible to raise the embankment without problem up to the planned final height of 5 m, in a time span of 15 days.

The punching phase concomitant with the laying of the last 3 meters that lasted 4 days resulted in an almost uniform settlement of about 1.80 m and the formation of a peripheral excrescence of wastes of an average height of 1.5 m in relation to the NG over a distance of about 10 m around the structure (Fig. 5).

Fig. 5 - Overall view of structure and toe excrescence

In addition, a local failure of the end of the structure was observed, corresponding to the fault caused purposely as explained in paragraph II.2.2 b (Fig. 6).

Fig. 6 - Local failure of embankment in purposely under-sized area

III.2 - Interpretation of the measurements

III.2.1 - Settlements. Excess interstitial pressures

Figure 7 illustrates the evolution of the embankment settlements and of the excess interstitial pressures generated in the layer of wastes. The corresponding curves call for the comments below:

- the apparent punching actually occurred only during the second embankment stage (2 m < H_R < 5 m) between the 13th and the 15th day. The generated excess pressures reached very high "peak" values (respectively 100 and 80 kPa) in the wastes, while the underlying peat layer was apparently little influenced by the loading;

- as time passes, a regular dissipation of the excess pressures was observed, with accompanying settlements.

An almost uniform range of settlements was noted under the embankment, on the cross-section fitted with instruments; this observation fits well with the concept of a monolithic behaviour of the structure.

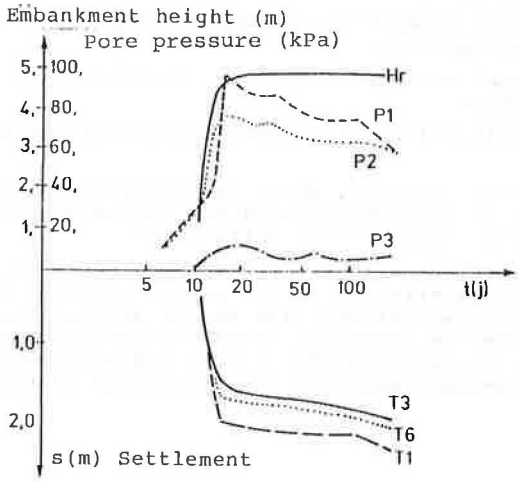

Fig. 7 - Evolution of excess interstitial pressures and settlements as a function of time

III.2.2 - Deformation of the textiles

Figure 8 gives the real position of the various transverse layers and of the embankment, as well as the local deformations obtained with the aid of the various gauges, at the end of the construction of the structure (t = 15 days). It will be borne in mind that:

- the lowest layer, as anticipated, bears the greatest load; the deformations are relatively uniform in the central part, whereas in the vicinity of the excrescence, they tend to assume higher values. This may be explained by the locally disturbed geometry of the textiles at the foot of the embankment;

- a stabilization over time of the values observed in 15 days is noted since, after 6 months of observation, the relative variation of the deformations does not exceed 5 o/oo

× ◯ Local strain of geotextile (ε %)

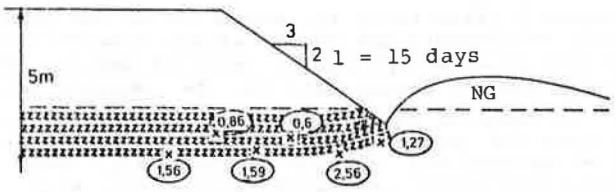

After 180 days $\Delta\varepsilon < 0.005\%$

Fig. 8 - Measured deformations on geotextiles immediately following construction

CONCLUSION

The monitoring of the Aulnois experimental embankment made it possible to verify the feasibility of controlled punching of a structure within wastes, and thereby to justify the solution proposed to the contractor.

From this experiment, it will be kept in mind that geotextiles:

- allowed to avoid a circular failure of the embankment,
- contributed to the rigidification of the structure,
- did not, however, alter the behaviour of the wastes as regards punching and the range of the expected consolidation settlements.

By comparison with the traditional punching solutions (penetration as far as the substratum by means of explosives), the use of geotextiles provides the necessary stability for intermediate solutions (partial penetration and control of settlements), and this has an obvious economic value.

BIBLIOGRAPHY

[1] BJERRUM L., 1967, Engineering geology of normally consolidated marine clays as related to the settlement of buildings, Geotechnique, vol. 17 (2), pp 83-113.

[2] MIEUSSENS C., MAGNAN J.P., SOYEZ B., 1985, Essais de compressibilité à l'oedomètre. Procédures recommandées par les Laboratoires des Ponts et Chaussées, Bull. Liaison Labo P. et Ch., No. 139, Sept.-Oct. 1985, pp 5-18.

[3] HALIBURTON T.A., ANGLIN C.C., LAWMASTER J.D. (1978) Testing of Geotechnical Fabric for Use as Reinforcement. ASTM Geotech. Test. J, (1) 4, pp 203-212.

[4] CHRISTOPHER B.R., HOLTZ R.D. (1984) Geotextile Engineering Manual, Federal Highway Administration, Washington, D.C. 850 pp.

[5] DELMAS Ph., GOURC J.P., PERRIER M. (1985) Dimensionnement d'ouvrages renforcés par géotextiles. Proc. 11th Int. Conf. on Soil Mch Found. Eng. San Fransisco, pp 1769-1772.

[6] DELMAS Ph., BERCHE J.C., GOURC J.P. (1985) Le dimensionnement des ouvrages renforcés par géotextiles. Programme Cartage. Journées des Laboratoires des Ponts et Chaussées. Lyon - 25 pp.