Third International Conference on Geotextiles, 1986, Vienna, Austria

GOURC, J. P. and RATEL, A., IRIGM, Université de Grenoble 1, France
DELMAS, PH., Laboratoire Central des Ponts et Chaussées, Paris, France

DESIGN OF FABRIC RETAINING WALLS: THE "DISPLACEMENTS METHOD"
BERECHNUNG DER POLSTERWÄNDE: „METHODE DER VERSCHIEBUNGEN"
CALCUL DES MURS EN SOL RENFORCE: «METHODE EN DEPLACEMENTS»

SUMMARY

This paper sets out a new method of calculating vertical, geotextile-reinforced retaining walls using limiting equilibrium. This is called the "displacements method". This assumes that the geotextile behaves as an embedded membrane. The main interest of this method resides in its taking into account geotextile deformability, and, as a result, permitting the design dimensions to be varied relative to stiffness modulus J of a given geotextile and the permitted level of structure movement.

I - INTRODUCTION

The design of structures in reinforced earth may use either numerical techniques such as finite elements as proposed by GOURC et al. (1) or the limiting equilibrium methods such as those initially used for "Terre Armée" (2). The finite elements method gives satisfactory results when considering fill on soft ground reinforced by a single sheet of geotextile. On the other hand, when considering multisheet walls a finite element calculation becomes very laborious in so far as ground build-up needs to be chronologically considered, layer by layer, if valid stress-strain results are to be obtained (Mc GOWN et al. (3)).

The limiting equilibrium methods are much easier to use but present the major disadvantage of not taking into consideration the strain modulus J for the reinforcing.

A vertical or sub-vertical retaining wall reinforced by several sheets of geotextile will be considered. After a short explanation of the existing limiting equilibrium method we shall put forward a limiting equilibrium method called the "displacement method". The study of local equilibrium in the geotextile enables its elongation to be taken into consideration and, as a result, a comparison to be made between the behaviour of two geotextiles with different strain moduli.

In this paper we shall only take in account vertical face embankments in reinforced soil due to the limited space available. However, the "displacement method" described apply to sloping banks which constitute optimal use of geotextiles.

This method forms the basis of a design program prepared at the Laboratoire Central des Ponts et Chaussées (Delmas et al. (4)), the CARTAGE program, described below.

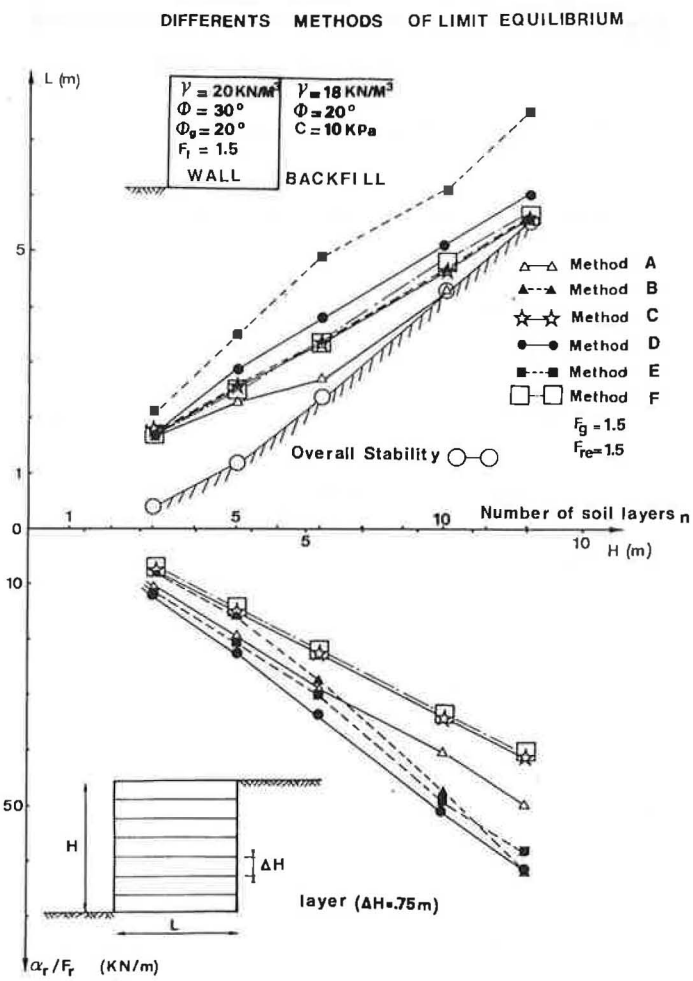

Figure 1 - Comparison of dimensions obtained by the different limit equilibrium methods for reinforced embankments with vertical walls.

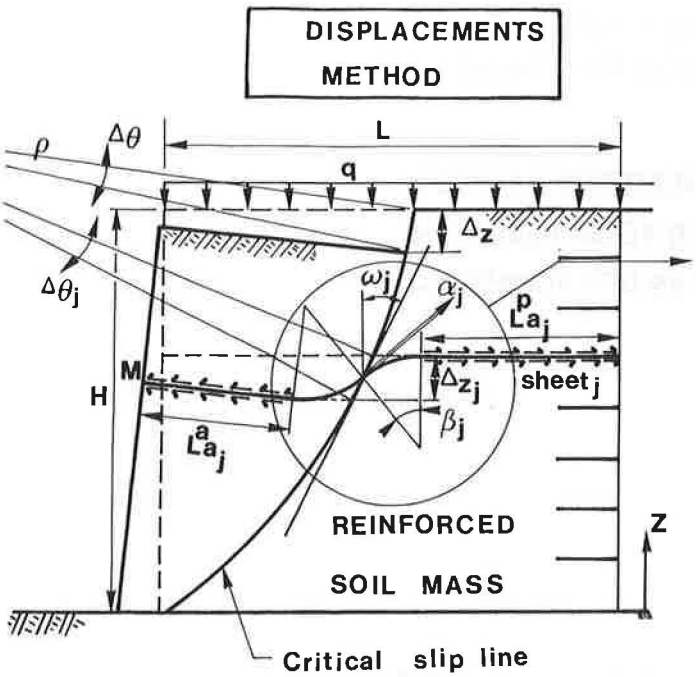

Figure 2 - Displacement method general principle.

II - CURRENT LIMITING EQUILIBRIUM METHODS

A large number of design methods can be listed. As an indication we compared the dimensions obtained for vertical face embankments with height H and uniform spacing ΔH of the geotextile sheets. The minimum width L of the reinforced embankment and minimum permitted force in the geotextile (αr/Fr - in which αr represents the failure force and Fr the safety factor) are calculated. (Figure 1). The methods considered are described in the references below:

A - ("Terre Armée" (2), B (TRRL (5)), C ("Standard" (6)), D (FHA-USA (7)), E (Broms (8)) and F (Jewell et al. (9)).

However, so as to harmonize the results obtained we considered the same values for the partial safety factors whatever method was adopted :

External stability: (Fre) overturn stability
(Fg) sliding stability on its base
Internal stability: (Ff) ground-geotextile interaction
(Fr) tensile stress failure of the geotextile.

A relatively important variation is noted between the different dimensions obtained.

III - DISPLACEMENT METHOD

III-1 Failure mode : As in all limiting equilibrium methods, an active zone is taken as existing close to the vertical face. The separation between the active and passive zone is the surface of slip. Generally, the slip surface is taken as being flat or curved (figure 2). Let Δz be the vertical projection of slip at the head (z = H) and Δz_j be the vertical projection of the slip at the level of sheet j (total sheets: n). In the examples

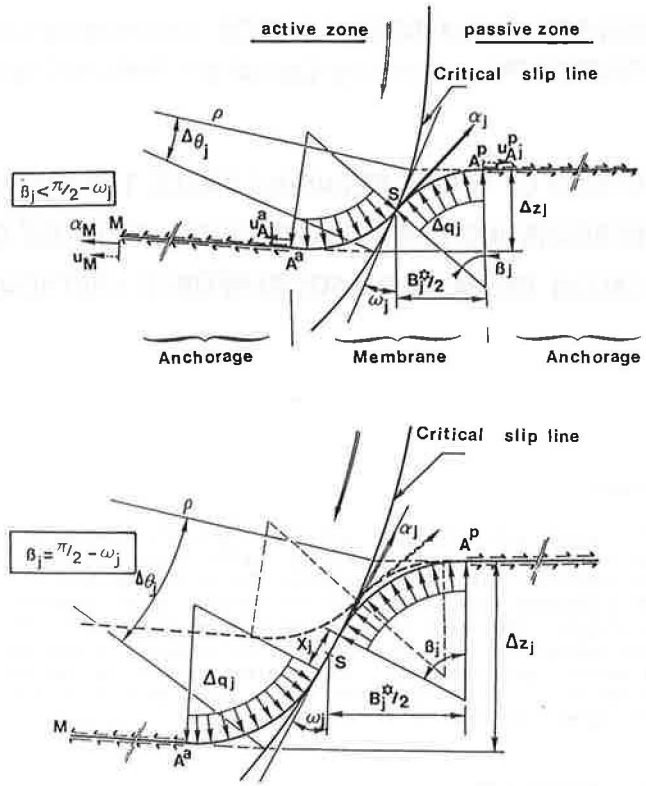

Figure 3 - Local behaviour of geotextile close to slip surface - anchored membrane

given here, the active wedge is supposed to slip without any overall strain (let $\Delta z_j = \Delta z$ for a slip plane and $\Delta\theta_j = \Delta\theta$ for a circular surface). However progressive failure along the slip surface may still be considered (Δz_j variable with z_j).

Similarly, mobilization of shearing resistance along the sliding surface will be a function of the displacement ($\Delta z_j/\cos\omega_j$ for plane ρ_j. $\Delta\theta_j$ for the circle). In the following examples only $\tau = c' + \sigma' . tg\phi'$ are considered.

The geotextile is supposed to function like an anchored membrane. This mechanism is already taken into account for temporary reinforced roads (GOURC et al. (10)). The geotextile is anchored in the active (L^a_{aj}) and passive (L^p_{aj}) zones.

III-2 Behaviour of anchored geotextile (figure 4)

Based on the results obtained at the University of Grenoble, we have previously suggested (10) that consideration be given to a ground-geotextile elastic-plastic interaction law ($\tau = \tau$ constant for a movement $u = u_p = f(\sigma_z')$ and linearelastic behaviour for the geotextile (force $\alpha = J.\varepsilon$ in which ε represents strain). This leads to two anchor laws being formulated: an active law $u^a_{Aj} = f(\alpha_j)$ and a passive law $u^p_{Aj} = g(\alpha_j)$ relative to parameters σz_j, L_{aj}, J, u_{pj}. As an example (figure 4) we show that apparent rigidity of anchorage varies with these parameters.

III-3 Behaviour of the geotextile as membrane (figure 3)

A geotextile sheared by a slip surface takes on the form of a membrane. It is considered that a fabric which behave as a membrane is loaded by increasing of stress Δq_j normal on its plane. As long as Δz_j remains small ($\beta_j < \frac{\pi}{2} - \omega_j$) the membrane is bi-circular For large displacements Δz_j (relative to soil stiffness

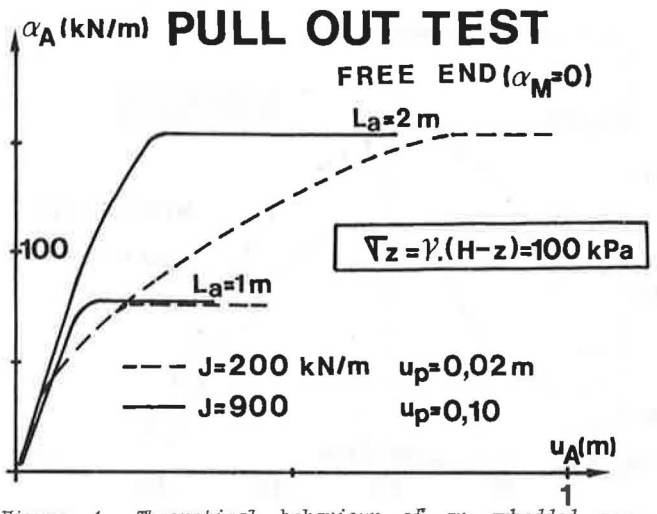

Figure 4 - Theoretical behaviour of an embedded geotextile influence of embedded length, strain modulus J and level slip u_p.

K_s), the membrane is tangent to the slip surface ($\beta_j = \frac{\pi}{2} - \omega_j$).

We considered $\Delta q_j = K_{sj} \cdot \Delta z_j/4$.

Calculation of K_s is still uncertain. With this aim, we set up an experiment (1). Adopt hypothetical ground elasticity (GIROUD (11)).

$$K_{sj} = (2 \cdot E_j)/(\bar{P}_H \cdot B_j^*)$$

i.e. with E = 2000 kPa, B_j^* = 0.20m $\bar{P}_H$ = 2.5
K_s = 8000 kN/m³.

* Membrane equilibrium : $\alpha_j = \Delta q_j \cdot B_j^*/2\sin\beta_j$. Force at S_j geotextile intersection/slip surface is inclined at β_j relative to the horizontal and β_j varies with Δz_j.

* Membrane elasticity - by taking into account anchorage-slip u^a_{Aj} and u^p_{Aj} at the membrane ends, the following is obtained:

$$\frac{\alpha_j}{J} + 1 + \frac{(u_{Aj} + u_{Aj}) - B_j^* \cdot \beta_j/\sin\beta_j - X_j/\cos\omega_j}{B_j^* - (\Delta z_j - X_j) \cdot tg\omega_j} = 0$$

in which $X_j = 0$ for $\beta_j = \pi/2 - \omega_j$

III-4 Overall stability: For all increasing Δz (thus Δz_j), n couples (α_j, β_j) are obtained from local equilibrium for each geotextile. The calculation method consists in increasing Δz by small amounts until overall equilibrium of the active wedge is checked. The equilibrium methods used here are derived from the Coulomb method (slip plane) - and the method of slices - disturbance method - (slip circle) - (12) -

III-5 Selection of the critical slip surface:

"Δz equilibrium" is calculated for a family of representative slip surfaces. It is to be noted that there is always a ω_c such that "Δz equilibrium" passes through a maximum Δz_c (figure 7). This is the criteria we have considered: the most critical shear surface is the one which gives maximum slip Δz. It is to be noted that this surface is not confused with the surface giving maximum α_j tensile forces.

IV - APPLICATION OF THE DISPLACEMENT METHOD

The following examples illustrate the interest of this new method.

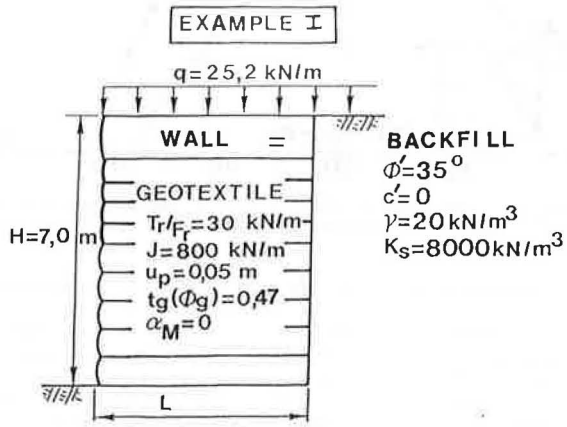

Figure 5 - Example I which was used to test the "Displacement method".

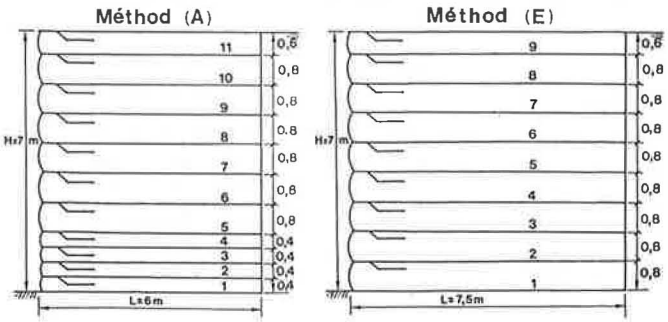

Figure 6 - Design of example I based on two design methods : (A) "Terre Armée" and (E) Broms.

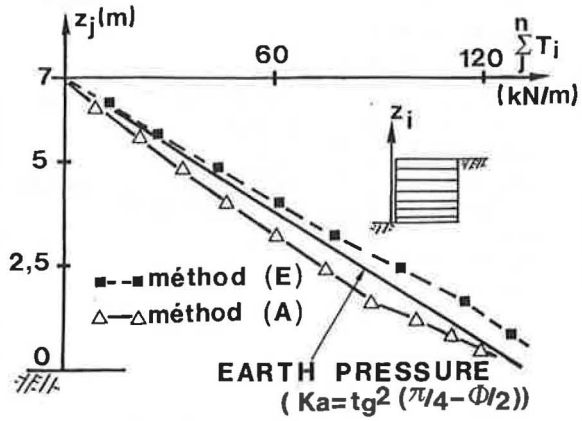

Figure 8 - Distribution of stresses in the geotextile using the "Displacement methods" with (A) and (E) design methods (example in fig. 7 - slip plane.)

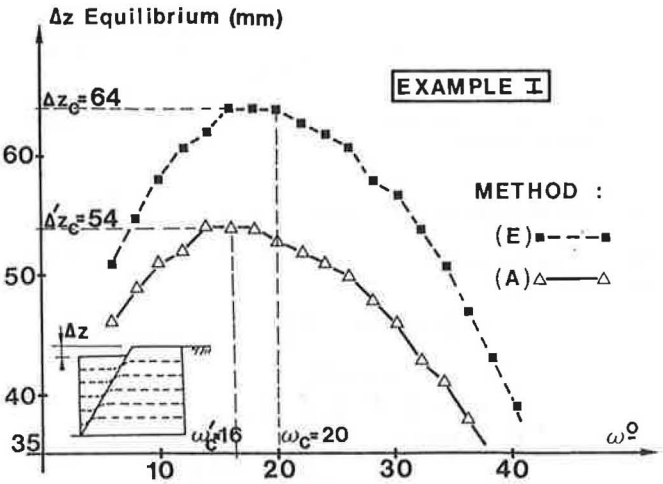

Figure 7 - Plotting to find critical shearplane for (A) and (E) design methods.

IV-1 Comparison of current design methods (shear plane)

Based on example 1 (figure 5), 2 design methods (A) and (E) giving different embankment profiles were compared (figure 6). Method (E) gave higher equilibrium slip failure Δz (figure 7). This agrees with the distribution of the forces which is higher in method (E) - (figure 8). It results that the "displacement method" has the advantage of allowing current design methods to be classified in accordance with Δz_c failure at equilibrium.

IV-2 Influence of conditions on the facing wall: (shear plane) (figure 9)

In example I and method (E), we compared the Δz equilibrium for a free geotextile at the wall ($\alpha_M = 0$). (This condition is close to actual conditions on a multi-sheet embankment with textile facing) and for a geotextile attached to an undeformable fixed wall ($u_M = 0$). Slip failure Δz_c is obviously below that for a fixed wall.

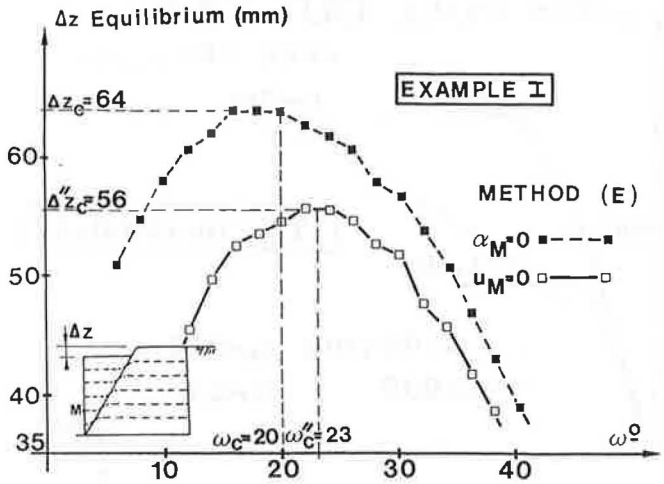

Figure 9 - Plotting to find critical shearplane for two wall configurations : free geotextile ($\alpha_M = 0$) and fixed geotextile ($u_M = 0$).

IV-3 Type of shear surface:

In example II (figure 10) which corresponds to a case history retaining wall we compared the results obtained for the critical flat shear plane and curved shear plane. The active displaced wedges are very close but sliding Δz_c is higher for the circle. This results in clearly higher stresses in the geotextiles.

V - NEW METHOD OF DESIGN: the CARTAGE program

This program was developped at the Laboratoire Central des Ponts et Chaussées in Paris based on the "displacement method". Compared with the general method described above, a certain schematization has been applied in order to obtain an operational design method (Delmas et al. (4)).

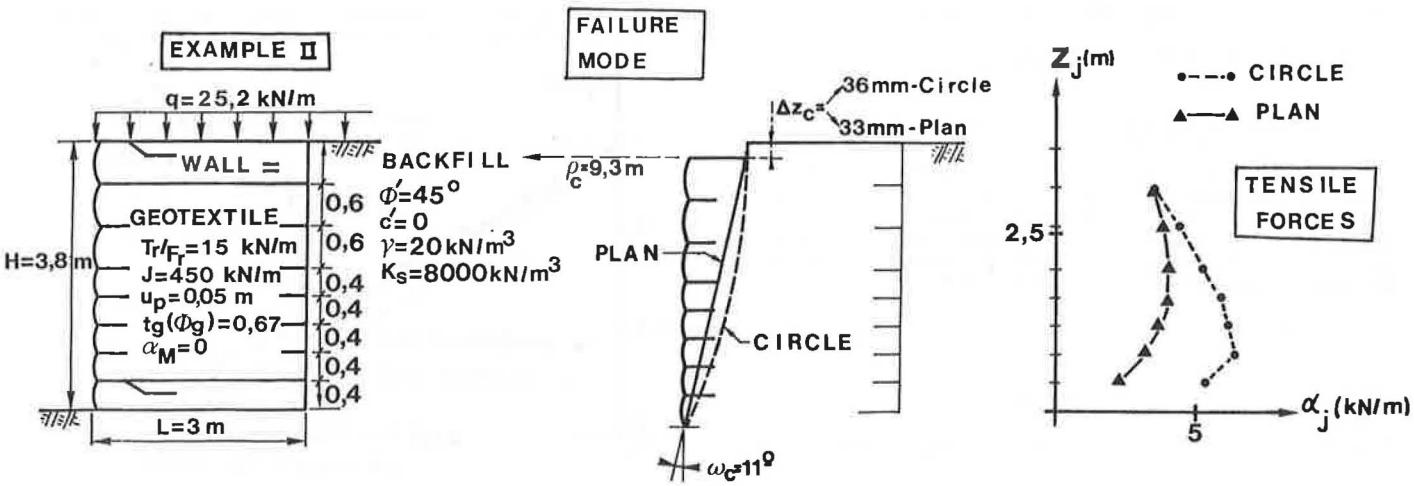

Figure 10 - Example II : influence of the critical shear surface based on the "Displacements method".

V-1 Geotextile behaviour:

The law of anchorage of geotextile is referred to in section III-2. Calculation has been extended to anchors passing through zones with varying friction parameters and subject to $\sigma'z$ stress variables along the embedded anchor (live loading, embankment with slope).

In view of the present uncertainty relative to calculation of the ground stiffness coefficient K_s (section III-3) and, as a result, to the actual behaviour of the geotextile membrane, two simplified examples being considered:

- "small displacements": the radius of membrane curving is taken as being infinite and the geotextile inclination and force α_j inclination at the intersection with the shearsurface, is nil, relative to the horizontal. The following formula is then obtained.

$$\Delta z_j = (u^a_{Aj} + u^p_{Aj}) \ / \ tg\omega_j$$

This schematization improves safety.

- "larger displacements": the membrane curve radius is taken as zero and the geotextile (therefore force α_j) is tangent to the shear surface. The following formula is then obtained

$$\Delta z_j = (u^a_{Aj} + u^p_{Aj}) \ . \ \cos\omega_j$$

V-2 Displacement criteria

The calculation method used in chapters III and IV no longer applies. It consisted in assessing the real displacements and stresses in the reinforced embankment. A mobilisation of overall ground shear resistance was adopted and critical sliding Δz_c was calculated.

In the CARTAGE program, which consists in designing a structure, a displacement limit is established at the head (Δz limit) relative to the type of structure, fill, etc.

Condition Δz < (Δz limit) introduces a limit to mobilizing forces α_j in the inclusions, i.e. (α_j limit).

(α_j limit) is itself limited by the allowed strength of the inclusion for pull-out.

$$(\alpha_j \text{ limit}) < \frac{\alpha_{A\max}}{F_f} \qquad \text{where } Ff = 2 \text{ for tensile loading}$$

$$(\alpha_j \text{ limit}) < \frac{\alpha_r}{F_r}$$

Calculation of F_r takes into account current gaps in knowledge of polymer and fabric behaviour in creeps (in particular there is no standardized test). References (13) and (14) enabled a stress limit below which there is no creep to be situated. Thus, reducing coefficient F_r is adopted permitting the stress below the creep limit to be localized.

	Temporary structure	Permanent structure
Polyester	F_r = 2	5
Polypropylene Polyethylene	F_r = 5	10

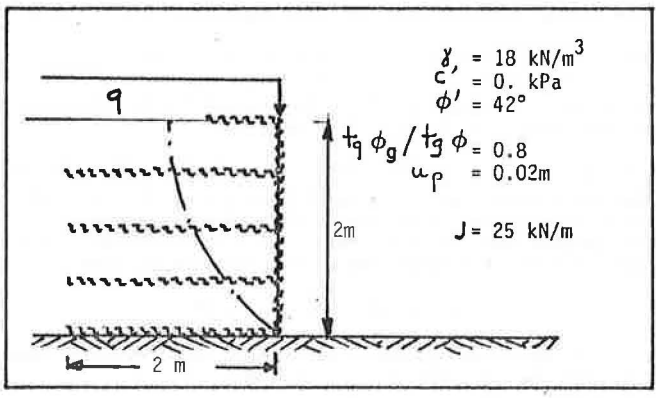

Figure 11 - Example III : Application of CARTAGE program.

CARTAGE program

J=25kN/m. q=o

$|\Delta z_j/\cos\omega j|$

LIT	DELTG	DEPF	U_M DEPP	α_M TENP	α_j TENM
3	0.02360	0.937E-04	0.000E+00	0.286E-01	0.150E+01
2	0.02360	0.271E-05	0.000E+00	0.206E-01	0.212E+01
1	0.02360	0.272E-07	0.000E+00	0.987E-01	0.260E+01

$\Delta z/\cos\omega$

LIT NU	DELTA EN TETE	FSOL	FANCRAGE
	0.000	0.74	
	0.030	1.11	
	0.023	0.99	
3			9.370
2			15.379
1			23.165

Tableau des résultats du programme CARTAGE

Table 1 - Typical table showing CARTAGE program results (Example III).

V-3 Overall equilibrium:

The shear surface is either circular or non-circular. The method used is sliding wedge analysis (12) based on a distribution of normal stresses along the shear surface:

$$\sigma' = \sigma'_o \left(\lambda + \mu \ . \ tg \left(\frac{\pi}{2} - \omega\right)\right).$$

in which σ'_o represents Fellenius stress.

This method enables the distribution of normal stress gain along the slip surface caused by intersected reinforcing to be obtained by inputting the αj forces with their angle

Once (Δz limit) has been established and, as a result, the (α_j limit), the maximum safety factor F_s which may be mobilized as a resistance to ground shear may be determined.

The design of reinforced embankment will be considered as permissible if F_s > 1.5. Then, using iterations, the magnitude of Δz < (Δz limit) is defined so as to give F_s = 1.5.

VI - TAKING INTO ACCOUNT THE TIME PARAMETER

Design using the CARTAGE program requires that the stresses in the inclusions below the creep limit be adopted so as to compensate for the incomplete knowledge of polymer behaviour beyond this limit.

With a view to future works which may contribute to improving knowledge of creep behaviour, we show possible additional use applications of the CARTAGE program:
The ground creep is not taken into consideration. Geotextile creep is schematized by the exponential law:

$$\varepsilon\ (\alpha,\ t) = \varepsilon_o + \varepsilon_t\ .\ t^n$$

With an initial low level of strain the following may generally be considered: $\varepsilon_o = A_o\ .\ \alpha$

$$\varepsilon_t = A_t\ .\ \alpha$$

An equivalent strain modulus may then be defined for the geotextile subject to α during time t:

$$J\ (t) = (A_o + A_t\ .\ t^n)^{-1}$$

Non-woven polyester (NTAPES)

$$J\ (t) = (0.04 + 0.005t^{0.08})^{-1}$$

Woven polypropylene (TPP)

$$J\ (t) = (0.008 + 0.014t^{0.15})^{-1}$$

In example III (figure 11), the CARTAGE program permitted initial displacement of the top (for $F_s = 1$ and in the hypothesis of "large displacements") to be calculated (table 1) and its evolution with time to be plotted (figure 12).

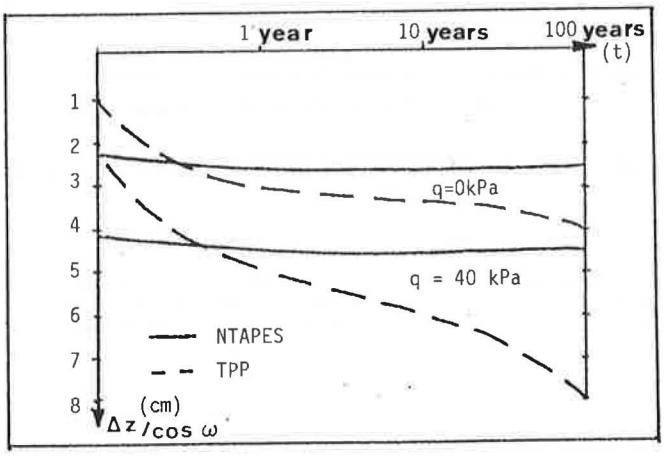

Figure 12 - Example III : Displacement at top relative to time for 2 geotextiles and 2 different live loads.

VII - CONCLUSION

The "displacement method", a new proposed limiting equilibrium method, has the advantage of taking into account the deformability of the geotextile and, as a result, permitting design modulation relative to stiffness factor J of the selected geotextile and the level of permitted strain of the structure.

REFERENCES

(1) GOURC J.P., MOMMESSIN M., MONNET J. : Geotextile reinforced embankment over weak soil : different theoretical approaches. 3rd International Conference on Geotextiles and Geomembranes - Vienna 1986.

(2) Les ouvrages en Terre Armée - Recommandations et règles de l'art - LCPC - SETRA - Sept. 1979.

(3) Mc GOWN A., ANDRAWES K., MASHHOUR M., MYLES B., : Strain behaviour of Soil-Fabric model embankments - 10th International Conference of Soil Mechanic and Foundations - Stockholm 1981.

(4) DELMAS Ph., BERCHE J.C., GOURC J.P. : Le dimensionnement des ouvrages renforcés par géotextile - le programme CARTAGE - Bulletin de liaison des Ponts et Chaussées - (à paraître 1986).

(5) MURRAY R.T. : Design of reinforced earth walls T.R.R.L. Int. Report - 1978.

(6) GOURC J.P., BORDAIRON M. : Remblais renforcés par géotextiles, comparaison des méthodes de calcul Journée sur le Renforcement par Géotextiles - Rapport Interne CFGG - Université de Grenoble 1 Janvier 1984.

(7) HALIBURTON A., LAWMASTER J.D., Mc GUFFEY V.C. : Use of engineering fabrics in transportation - related applications - Office of development Federal Highway Administration - Washington - Octobre 1981.

(8) BROMS B.B. : Polyester fabric as reinforcement in soil - Colloque International sur l'emploi des textiles en Géotechnique - Vol. 1, Paris 1977.

(9) JEWELL R.A., PAINE N., WOODS R.I. : Design methods for steep reinforced embankments - Symposium of Polymer Grid Reinforcement in Civil Engineering London - March 1984.

(10) GOURC J.P., MATICHARD Y., PERRIER H., DELMAS Ph. : Capacité portante d'un bicouche, sable sur sol mou, renforcé par géotextile. 2nd Internation Conference on geotextiles - Las Vegas - USA 1982.

(11) GIROUD J.P. : Tables pour le calcul des fondations Tome 2 - DUNOD.

(12) RAULIN P., ROUQUES G., TOUBOL A. : Bulletin de Liaison des Ponts et Chaussées - Rapport de recherche n° 36 - 106 p - 1974.

(13) KABIR M.H. : In isolation and in soil behaviour of geotextiles - Phd University of Strathclyde Glasgow 1985.

(14) MIR ARABCHAHI N. : Fluage des matériaux textiles utilisés dans les ouvrages de Génie Civil - Th. D.I. - Ecole Centrale Paris - 1985.

ADKNOWLEDGMENTS

The authors thank J.C. BERCHE and M. BORDAIRON for their support to computing and J. BELISLE for his support to translation.