ASPECTS OF VERTICAL DRAIN QUALITY AND ACTION

N. Cortlever
Cofra

S. Hansbo
Stocksund, Sweden

ABSTRACT: Vertical drainage has been used since the middle of the 1930s to accelerate the consolidation settlement process induced by loading of normally consolidated low-permeability soil. By vertical drainage the drainage paths are shortened and, therefore, the time required for excess pore water pressure, induced by the loading operation, to disappear will be strongly reduced. Nowadays, mostly band-shaped, prefabricated drains are utilised, the quality of which varies considerably. Moreover, the depth of drain installation is continuously increasing which considerably raises the standards of drain quality. In this paper factors and soil conditions influencing the action of drains are analysed. The requirements to be placed on the vertical drains in order that they function satisfactorily are documented. Methods of quality control are presented.

1 INTRODUCTION

The first type of prefabricated vertical drain, introduced on the market, was invented in Sweden by Walter Kjellman in 1937. These drains, named Cardboard wicks (Kjellman, 1948), were made of two cardboard sheets glued together with an external cross-section of 100 mm times 3 mm and including 10 longitudinal channels, 3 mm in width and 1 mm in thickness. A machine for installation of Cardboard wicks was invented with a capacity of installing drains to a depth of 14 m. The efficiency of Cardboard wicks was first investigated in 1945 in a full-scale test north of Stockholm. The investigation showed that the drains functioned in the expected way, which made Barron in the discussion of his paper (Barron, 1948) state: “It is possible that, should wick material and installation machines become available in the United States, sand wells may be outmoded”. Cardboard wicks were later successfully utilised to speed up the consolidation process in many projects.

This successful attempt to produce a prefabricated drain created an interest in making prefabricated drains with improved drainage and strength characteristics. Cardboard wick served as a prototype for these drains, the so-called band drains. The first of these new types of band drains, the Geodrain, was developed at the Swedish Geotechnical Institute in the 1960s. The Geodrain consists of a central core of plastic material with longitudinal grooves, surrounded by a filter sleeve. After some successful results of accelerated soil consolidation by means of the Geodrains, a large number of different types of band drains have been introduced on the market (Fig. 1). Most of these band drains have a central core, enclosed in a filter sleeve and provided with various types of internal channel system. However, band drains without filter sleeve also exist consisting of a porous material, which allows water inlet into the drains and discharge of water through the drains. Fibre drains made out of coir strands enveloped by jute burlaps have also been developed (Lee *et al.*, 1995).

Nowadays the depth of installation of vertical drains is continuously increasing. This puts increasing demands on the capacity of the drains to discharge the water that is squeezed into the drains from the surrounding soil mass. Therefore, the requirements to be placed on the band drains in order that their efficiency can be guaranteed in practice have to be specified. Quality control systems have to be established.

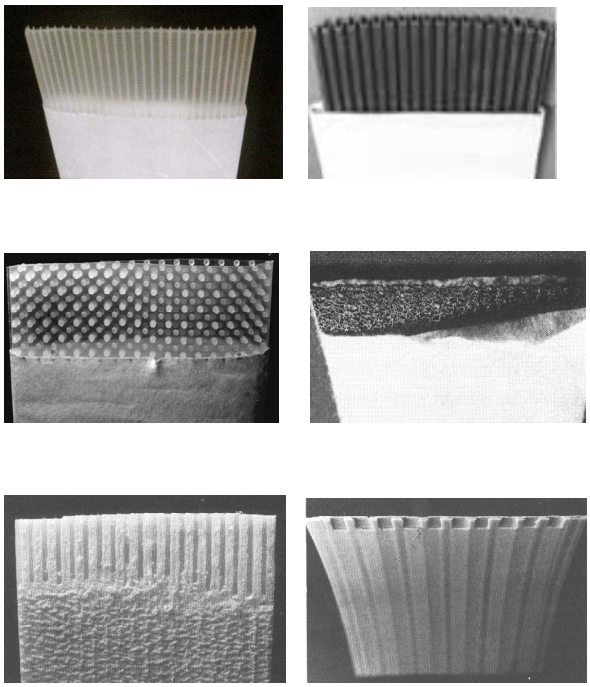

Figure 1 Examples of different makes of band drains (From top, left to right: Geodrain, Mebradrain, Alidrain, Colbond, Castle board and PVC).

2 DESIGN ASPECTS

2.1 *Analytical Assumptions*

Barron (1944) was first in developing the analysis of the influence on the consolidation process of vertical drainage in combination with consolidation due to one-dimensional vertical outflow of pore water. His analysis was based on existing solutions of one-dimensional vertical consolidation (Terzaghi, 1925) and radial heat flow. Barron's analysis (1944) was based on the following assumptions (cf. Fig. 2):

- Darcy's flow law is valid;
- the soil is water saturated;
- displacements due to consolidation take place in the vertical direction;
- excess pore water pressure at the drain well surface is zero;
- the cylindrical boundary of the soil mass dewatered by a drain is impervious;
- excess pore water pressure at the upper and lower boundaries of the soil mass is zero;
- no vertical flow at half the depth of soil mass (homogeneous soil condition).

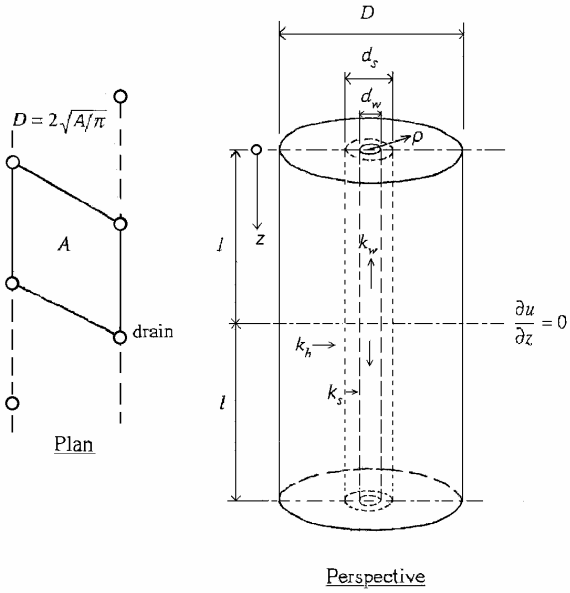

Figure 2 Assumptions utilised in the analysis of vertical drainage. Upper and lower boundaries of the soil cylinder fully drained (no excess pore water pressure).

As can be seen, Barron in these assumptions presumed that the permeability of the drain well was high enough for well resistance to be neglected. He also assumed that the installation of drains did not affect the properties of the soil. Later on, Barron (1948) included disturbance effects due to drain installation, a *zone of smear* with reduced permeability, and also the effect of well resistance. Barron assumed two different cases to take place: the case of *free strains* and the case of *equal strains.*

In the *free strain hypothesis* Barron assumes that the load is uniform over the circular zone of influence for each drain well and that differential settlement over the zone do not lead to redistribution of stresses by arching of the load. Well resistance is ignored.

In the *equal strain hypothesis* Barron presumes aching to redistribute the load so that the vertical strains become equal irrespective of the radial distance from the drain, and that, consequently, no differential settlement will take place. The effect of well resistance is taken into account, but the result obtained is incorrect.

An important conclusion of Barron's analyses is that the difference in average consolidation according to the two types of analysis becomes negligible. Therefore, equal strain analysis has become routine due to its simplicity as compared to free strain analysis. It is interesting to note that Kjellman (1937) had presented a simple solution to the problem based on equal strain analysis (no smear, no well resistance) as a basis for the analysis of the effect of Cardboard wicks.

A number of solutions and discussions regarding the influence of well resistance on the result of vertical drainage have later on been presented (e.g. Hansbo, 1981, 1997, 2001; Yoshikuni & Nakanodo, 1974; Yoshikuni, 1992; Onoue, 1988; Zeng & Kie, 1989; Lo, 1991). A vital issue is to establish the requirements on discharge capacity for vertical drains installed to great depth and, therefore, in this paper the theoretical aspects will be concentrated on how to analyse the influence of discharge capacity on the consolidation process. Although experience of full-scale field tests shows that a better correlation between observations and theoretical results is obtained on the assumptions of exponential flow (Hansbo, 1960, 1997), the analysis in this case will be based on the assumption of linear flow according to Darcy's law. The reason is that the permeability, which is an important parameter in the analysis of the consolidation process, is determined on the assumption of validity of Darcy's law. Furthermore it is assumed that the installation of the drains does not change the consolidation characteristics of the soil (no zone of smear with reduced permeability). Considering the degree of consolidation achieved after a certain time of loading, these assumptions lead to conservative discharge capacity requirements.

The consolidation equation that is used as a basis for the analysis is based on the assumption of equal strain condition and was presented by Hansbo (1981). The solution thus obtained has been verified by advanced finite element analysis (cf. Lo, 1991). The consolidation equation is written:

$$t = -\frac{\mu D^2}{8c_h}\ln\left(1-\overline{U}_h\right) \tag{1}$$

where

$$\mu = \frac{D^2}{D^2-d_w^2}\left(\ln\frac{D}{d_w}-\frac{3}{4}+\frac{d_w^2}{D^2}-\frac{d_w^4}{D^4}\right)+\frac{\pi z(2l-z)k_h}{q_w}\left(1-\frac{d_w^2}{D^2}\right),$$

D = diameter of cylindrical soil mass dewatered by a drain,
d_w = drain diameter,
k_h = permeability of the soil in the horizontal direction,
$q_w = k_w \pi d_w^2/4$ = discharge capacity of the drain
$2l$ = depth of drain installation
z = depth considered

Omitting terms of minor significance we have
$\mu = \ln(D/d_w) - 3/4 + \pi z(2l-z)k_h/q_w$.

From equation (1) it becomes obvious that the influence of well resistance (in other words of the discharge capacity) on time of consolidation increases with depth of drain installation. The time to reach a certain degree of consolidation increases with depth z and becomes maximum for $z = l$. For a drain without well resistance, i.e. when the discharge capacity $q_w \to \infty$, we have $\mu = \ln(D/d_w) - 3/4$, the same value as obtained for $z = 0$. The ratio of time of consolidation t_1 attained at $z = l$ due to well resistance to time of consolidation t_2 for a fully efficient drain (no well resistance) becomes:

$$\frac{t_1}{t_2} = \frac{\ln(D/d_w) - 3/4 + \pi l^2 k_h / q_w}{\ln(D/d_w) - 3/4} = 1 + \frac{\pi l^2 k_h / q_w}{\ln(D/d_w) - 3/4} \qquad (2)$$

The prolongation in time of consolidation at depth $z = l$ due to well resistance can thus be expressed by the relation $t_1 = t_2(1 + dt/100)$, where the delay dt in time of consolidation, calculated as a percentage, follows the relation:

$$dt = \frac{100\pi l^2 k_h}{q_w \left[\ln(D/d_w) - 3/4\right]} \qquad (3)$$

Considering instead the delay in time of average consolidation we have

$$dt = \frac{200\pi l^2 k_h}{3 q_w \left[\ln(D/d_w) - 3/4\right]} \qquad (4)$$

2.2 *Effect of well resistance*

According to equations (3) and (4) the required discharge capacity will depend on the depth of drain installation, the ratio D/d_w and the permeability k_h. The effect of well resistance is exemplified in Fig. 3.

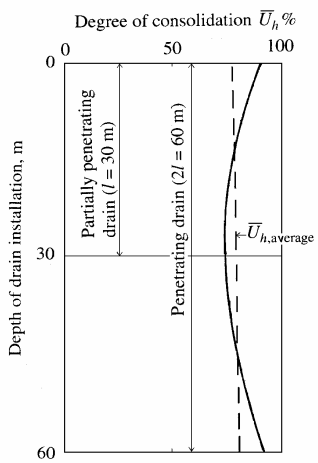

Figure 3 Example of influence of well resistance on the degree of consolidation for partially penetrating and penetrating drains installed to depth 30 m and 60 m, respectively. Consolidation parameters: q_w = 100 m^3/year, D = 0.945 m, d_w = 0.065 m, c_h = 1.0 m^2/year, k_h = 0.1 m/year (3x10^{-9} m/s), time of consolidation t = 0.5 year.

Choosing, as an example, a drain spacing of 0.9 m (drains installed in equilateral triangular pattern, i.e. D = 0.945 m) and a prefabricated band drain with d_w = 0.065 m, the discharge capacity requirements on partially penetrating drains for a maximum prolongation in time of consolidation of dt = 10% at the drain tip level ($z = l$, Figs. 2 and 3) are presented in Fig. 4.

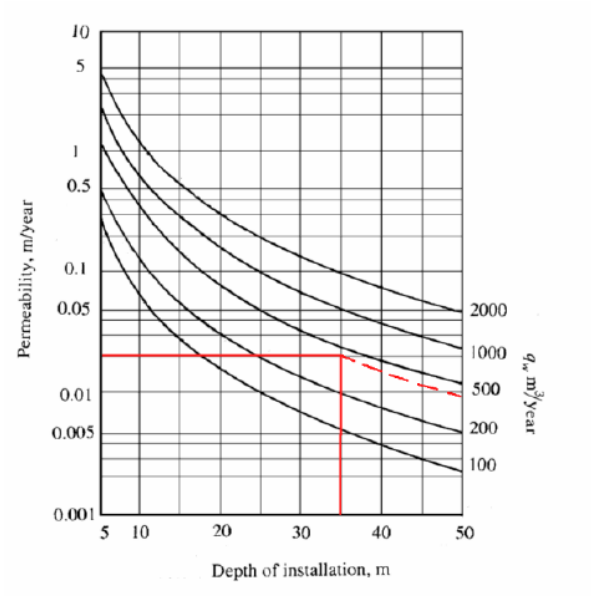

Figure 4 Discharge capacity requirements on drains with regard to soil permeability and depth of installation for partially penetrating drains (cf. Fig. 3). D = 0.945 m; d_w = 0.065 m; Delay dt = 10% at depth $z = l$ (Example: k_h = 0.02 m/year; l = 35 m: $q_w \geq 400$ m^3/year). For penetrating drains (efficient drainage at top and bottom), the depth values are doubled.

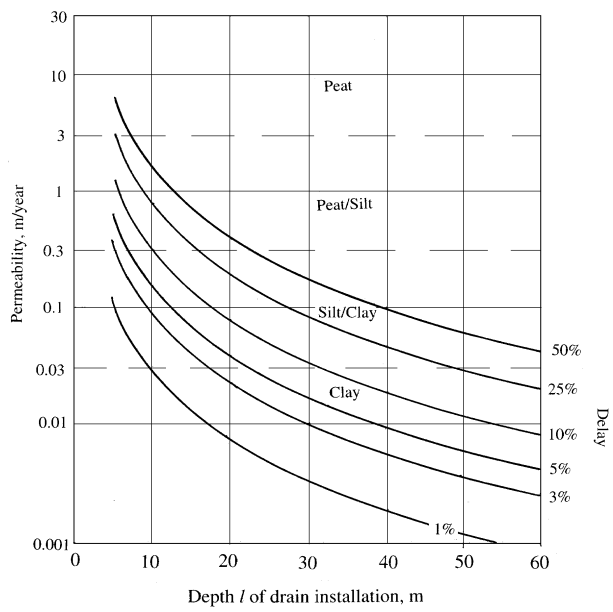

Figure 5 Delay dt in time of consolidation at depth $z = l$ of penetrating drains, cf. Fig. 2 (at the tip of partially penetrating drains) in % for a band drain with a discharge capacity of 500 m^3/year. D = 0.945 m, d_w = 0.065 m.

As can be seen from equation (3), a relative decrease in *dt* causes a corresponding relative increase in q_w (for example, a decrease in *dt* from 10% to 5 % doubles the discharge capacity requirements). The delay in time of consolidation during the consolidation process in various types of soils at the drain tip level of partially penetrating drains with a discharge capacity q_w = 500 m^3/year is exemplified in Fig. 5. The delay in time of consolidation decreases with increasing drain spacing. Thus, in a soil with a permeability of 0.03 m/year and an installation depth of 60m, the delay for a discharge capacity of 500 m^3/year at the tip level of partially penetrating drains becomes theoretically 36.1% for *D* = 0.9 m, 32.6% for *D* = 1.1 m, 30.2% for *D* = 1.3 m and 28.4% for *D* = 1.5 m.

The solution to the consolidation problem presented by equation (1) for drains, the well resistance of which has to be taken into account, cannot be applied directly on soils in which the permeability varies strongly with depth. The influence of layers with different consolidation characteristics has been analysed by Onoue (1988) and a simplified procedure is presented of how to take into account the effect of layered soil with different consolidation characteristics by the use of equation (1).

Discharge capacity tests on band drains installed in soil on a laboratory scale and subjected to increasing effective lateral stress have resulted in the values presented in Fig. 6.

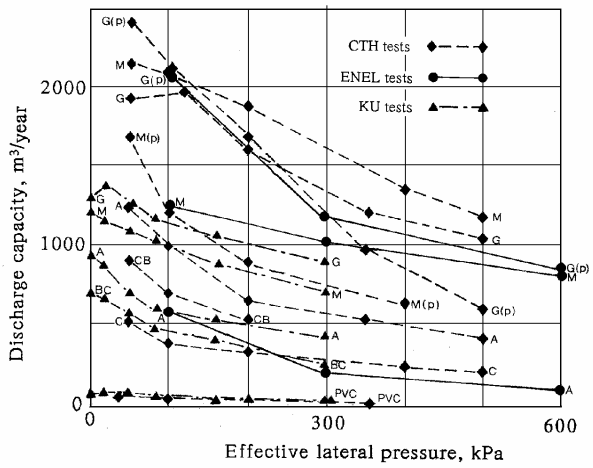

Figure 6 Results of discharge capacity tests for different band drains carried out on a laboratory scale. Drains enclosed in soil. Legend: A = Alidrain, BC = Bando Chemical, C = Colbond, CB = Castle Board, G = Geodrain and M = Mebradrain. (p) indicates filter sleeve of specially prepared paper (Hansbo, 1983a).

In the ENEL tests (Jamiolkowsky *et al.*, 1983) the drains were tested in full scale. In the CTH tests (Hansbo, 1983) and in the KU tests (Kamon, 1984) the drains were tested with reduced width (40 and 30 mm, respectively). The results of the investigations show that the discharge capacity decreases with increasing lateral effective stress. Thus the filter is pressed into the channel system and causes a successive reduction of the cross-sectional channel area of the drains. Since the effective lateral pressure against the drains increases with depth, the capacity of the drains to withstand the negative influence of increasing lateral effective stress is of major importance. In consequence we can conclude that before a certain drain product is accepted in a project where drains are to be installed to great depth it is important that its efficiency has to be verified by some kind of control procedure.

Bacteriological activity and fungi attacks also have a long-term effect on the discharge capacity. The result of an investigation of the effect of ageing on discharge capacity reported by Koda *et al.* (1986) is shown in Fig. 7. The drains, enclosed in the *in-situ* soil, were sampled in peat and gyttja after different lengths of time after installation and tested in the laboratory in a triaxial cell. As can be seen, both paper and synthetic filter are subjected to long-term effects of ageing, paper filter in particular.

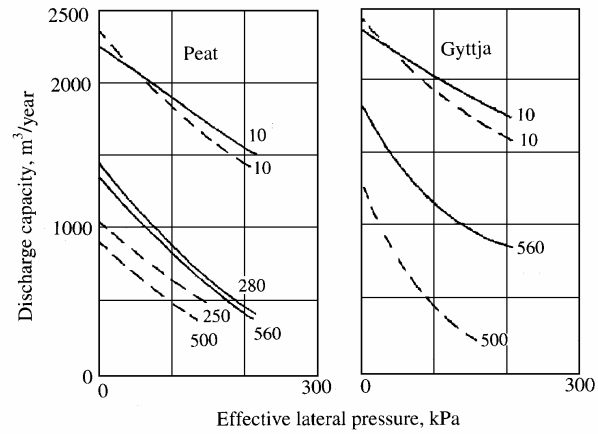

Figure 7 Influence on discharge capacity of time-dependent filter effects in two different types of soil (Koda et al., 1986). The number of days left in the soil after installation is given in the figure. Unbroken lines represent Geodrains with synthetic filter, broken lines Geodrains with paper filter.

Another important fact, which has to be taken into account, is the influence on the discharge capacity of bending of the drains. Thus, in highly compressible soil the drains are often subjected to buckling or kinking, Fig. 8.

Figure 8 Buckling of drain due to large relative compression of the soil.

3 METHODS OF DISCHARGE CAPACITY CONTROL

According to Fig. 6, the discharge capacity is subjected to large variations even for the same type of drain product. During the time when these drains were produced, no general control system had been established. The control was a matter of concern only for the producer of the drains. Moreover, the depth of installation of vertical drains at that time was maximum 20–30 m, which limits the effect of well resistance. In consideration of the present situation with increasing depths of drain installation, it seems necessary to establish a control system that can be accepted as international standard.

A working group, under superintendence of the European Federation of Foundation Contractors, EFFC, is now drawing up a European standard of vertical drainage. The quality control of the band drains is an important issue of the standard. In the standard, the method of control applied in the Netherlands is proposed to become one of the routine methods to be utilised. The control includes both testing of a straight drain and a buckled drain.

According to this control method, the discharge capacity of a straight band drain should be determined in a testing chamber, such as the one shown in Fig. 9. The drain sample, wrapped with a membrane of latex, is placed into the cell. The membrane thickness of the testing sleeve should be suitably selected not to influence squeezing of the filter into the channel system, preferably less than 0.35 mm. The cell is filled with water or air, which is pressurised to the desired value. A manometer monitors the pressure while a flow meter regulates and monitors the amount of water that flows through the drain sample. Transparent tubes connected to the in- and outflow chamber detect the piezometric head difference along the drain sample.

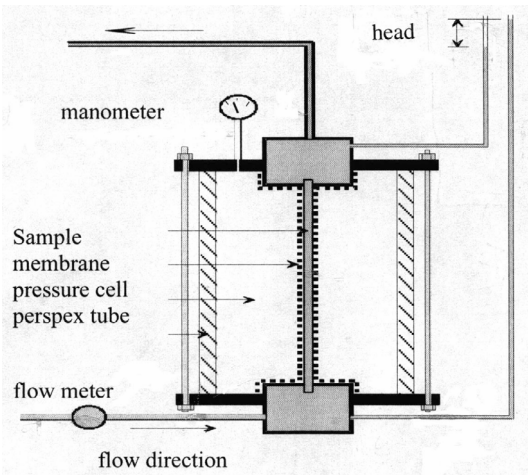

Figure 9 Testing device for determination of discharge capacity (apparatus No. 2, EN/ISO 12958).

When testing the sample, regard has to be paid to the soil temperature at the site of drain installation. Moreover, the following conditions should be satisfied:

1. Place the specimens under water, containing a wetting agent (e.g. an aryl alkyl sulfonate at 0.1% V/V content), stir to remove air bubbles and leave to saturate for at least 12 h. Cut a sample to 320 mm length and wrap it in the latex membrane.
2. Place the membrane with the sample in the apparatus.
3. Put a pressure of 2 kPa against the test specimen and allow de-aerated water to flow through the sample in order to remove all air. Take all necessary precautions to avoid preferential flow paths along the boundaries of the specimen.
4. Adjust the cell pressure to 20 kPa and hold this pressure for 6 min.
5. Allow de-aerated water to flow through the sample under a hydraulic gradient of 0.1 for 2 min.
6. Measure the flow volume per time unit with calibrated flow measurement equipment or collect the water passing through the system over a fixed period of time. The volume shall be minimum 0.5 l. Record the volume of water collected. Repeat this procedure two more times and take the average of the volume of water collected.
7. Increase the cell pressure to 100 kPa. Keep this pressure constant for a period of 2 weeks.
8. Adjust the gradient to 0.1 and repeat the procedure given in point 7.
9. Increase the cell pressure to 1.2 times the expected maximum *in-situ* horizontal earth pressure against the drain according to design condition.
10. Adjust the gradient to 0.1 and repeat the procedure given in point 7.

Determination of the discharge capacity of a buckled drain should be performed in the test chamber shown in Fig. 9, provided with the complementary device shown in Fig. 10.

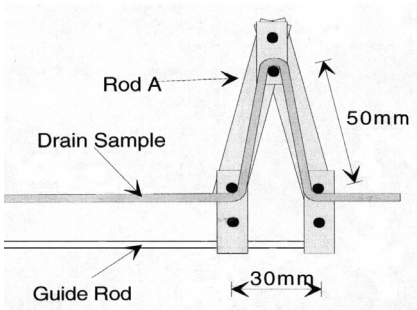

Figure 10 Apparatus to test discharge capacity of buckled

Determination of the discharge capacity of buckled drains should be performed by the same procedure whereby the following modifications should be made:

1. The sample length should be 420 mm.
2. The sample (inclusive of the latex membrane) should be put into the buckling apparatus (that buckles the drain sample slowly) and then placed into the cell along with the buckling apparatus as showed in figure 6
3. The cell pressure should be kept 60% of the pressure used for straight drains (60 and 180 kPa for CE-labelling)

According to the testing conditions, the volume of water V passing through the drain per time unit ($V = q_n b$) is determined under a hydraulic gradient equal to 0.1. According to the definition, the discharge capacity q_w represents the volume of water passing vertically through the drain per

time unit under a hydraulic gradient equal to one. The resulting value of q obtained thus has to be multiplied by 10.

The testing conditions prescribe that the cell pressure should be kept constant for a period of 2 weeks. This is quite important for a correct evaluation of the discharge capacity. The importance of the duration of a constant maintained cell pressure on the test results is exemplified in Fig. 11. If the duration of maintained cell pressure is shorter, the discharge capacity value obtained has to be divided by a creep factor f_{cr}, the magnitude of which depends on the testing equipment and the duration of the test.

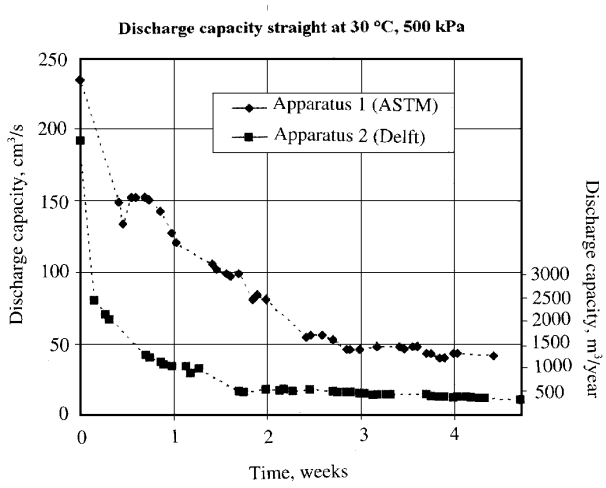

Figure 11 Effect of the duration of constant, maintained cell pressure on the result of discharge capacity tests obtained by the EN/ISO 12958 testing methods.

Based on the testing method described above the discharge capacity of a drain can be calculated according to the relation:

$$q_w = \frac{q_p b R_T}{i f_{cr}} = \frac{\theta b R_T}{f_{cr}} \qquad (5)$$

where
q_p = in-plane flow capacity (m^2/year);
b = drain width (m);
i = hydraulic gradient;
R_T = correction factor to a water temperature of 20°C;
θ = transmissivity (m^2/year);
f_{cr} = material factor applied for creep deformation;

If test apparatus 1 of the EN/ISO 12958 is used (similar to the ASTM D4716 method), much higher in-plane flow capacities will be measured as compared to those obtained from test apparatus 2 (figure 11). This is due to the fact that the drain is compressed uni-axially and not bi-axially. In apparatus 2 the width of the drain decreases in a similar way as in the soil.

For the Delft test apparatus (apparatus 2) shown in Fig. 9, the creep factors recommended are f_{cr} = 3 for a testing period of 1 week and f_{cr} = 1 for a testing period of 1 month.

If the ASTM test apparatus (apparatus 1) is used for determining the in-plane flow capacity, a higher creep factor has to be applied. The creep factors recommended in this case are f_{cr} = 8 for a testing period of 1 week and f_{cr} = 3 for a testing period of 1 month.

If 30 days in-plane flow tests with apparatus 1 are available, creep factors can be adapted to the obtained values from the tests. Thus, one can use the 7 days test for CE-mark and apply the creep factor found with the 30 days test instead of the prescribed creep factor.

4 REFERENCES

Barron, A. (1944). *The influence of drain wells on the consolidation of fine-grained soils.* (R.I.) Ph. D. Thesis, Providence, U.S. Engineering Office.

Barron, A. (1948). Consolidation of fin-grained soils by drain wells. *ASCE*, *Trans.*, Paper No. 2346, pp. 718 – 754.

Hansbo, S. (1960). *Consolidation of clay, with special reference to influence of vertical drains*. Swedish Geotechnical Institute, Proc. No. 18. Doctoral Thesis, Chalmers Univ. of Technology, Gothenburg.

Hansbo, S. (1981). Consolidation of fine-grained soils by prefabricated drains. *Proc. 10th Int. Conf. Soil Mech. Found. Eng.*, Stockholm, Vol. 3, Paper 12/22, pp. 677– 682.

Hansbo, S. (1997). Aspects of vertical drain design. Darcian or non-Darcian flow. *Géotechnique* **47**, No. 5, pp. 983 –992.

Hansbo, S. (2001). Consolidation equation valid for both Darcian and non-Darcian flow. *Géotechnique* **51**, No. 1, pp. 51–54.

Kjellman, W. (1937). *In Statens Geotekniska Institut, 1949. Redogörelse för Statens Geotekniska Instituts verksamhet under åren 1944–1948 (Report on the activities at the Swedish Geotechnical Institute during the years 1944–1948).* Swedish Geotechnical Instute, Meddelande No. 2.

Kjellman, W. (1948). *In Barron*: Consolidation of fine-grained soils by drain wells. *ASCE*, *Trans.*, Paper No. 2346, Discussion, pp. 749–751.

Lee, S. L., Karunaratne, G. P., Aziz, M. A. & Inoue, T. (1995). *Proc. Beng B. Broms Symp. on Geotechnical Engng*, World Scientific, pp. 243–261.

Lo, D. O. K. (1991). *Soil improvement by vertical drains*. Doctoral Thesis, University of Illinois at Urbana Champaign.

Onoue, A. (1988). Consolidation of multilayered anisotropic soils by vertical drains with well resistance. *Soils Fdns, Japan Soc. Soil Mech. Fdns Engng* **28**, No. 3, pp. 75–90.

Terzaghi, K. (1925). *Erdbaumechanik.*, Leipzig u. Wien.

Yoshikuni, H. & Nakanodo, H. (1974). Consolidation of soils by vertical drain wells with finite permeability. *Soils and Found.,* Vol. 14, No. 2, pp. 35–45.

Yoshikuni, H. (1992). *Basic consolidation theory of vertical drain method*, Faculty of Engng, Hiroshima Univ., Japan,

Zeng, G. X. & Xie, K. H. (1989). New development of the vertical drain theories. *Proc.12th Int. Conf. Soil Mech. Fdn Engng,* Rio de Janeiro, Vol. 2, Paper 18/28, pp. 1435 –1438