Geosynthetics, J. Kuwano & J. Koseki (eds)

The effects of large scale earthquakes on EPS structures

Masuo, T. & Hara, K.
Cvil Engineering Products Division Taiyokogoyo corporation (SUN)

Keywords: EPS, Hokuriku highway, embankment, earthquake, Niigata

ABSTRACT: More than 300 EPS structures, total volume of 199,000 m^3 and 5.7% of total volume used in Japan have been constructed in Niigata prefecture Japan by December 2003. The EPS Development Organization (EDO) was founded and has been worked for promoting EPS Construction Method. Recently the member companies of the organization surveyed the effects of the Mid-Niigata Earthquake on these EPS structures. This paper reports some survey results of the effects of earthquakes on typical EPS embankments.

1 INTRODUCTION

The M6.8 size Mid-Niigata Earthquake arose in mountain area of Niigata prefecture 17:56 23 Oct. 2004. Maximum 1500 Gal and over 150 Kine seismic wave motion was recorded at Kawaguti town near the epicenter. Afterquakes of JMA Seismic Intensity Scale 6 and over arose several times. Other than many people suffered from this earthquake, many buildings and civil engineering structures were collapsed and it caused severe damage on lifelines.

More natural landslides and damages on embankments due to ground condition were counted compare to the Southern Hyogo Earthquake (Jan. 1995) which characterised as urban earthquake hazards. Since EPS (Expanded Poly-Styrol) Construction Method was introduced into Japan about 20 years ago from Norway, 300,000 m^3 of EPS has been used every year for many projects such as widening road on steep slope or road embankment on soft ground. 303 sites and volume of 199,000 m^3 were counted in Niigata prefecture by Dec. 2003. This is 5.7% of total volume of EPS used as EPS structure in Japan. Among those EPS structures in

Figure 1. Niigata prefecture.

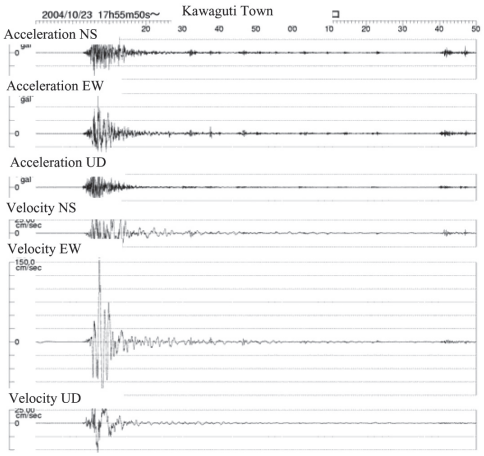

Figure 2. Seismic wave at Kawaguti town.

Table 1. Personal suffering.

	No.
Dead	36
Injured	2,374
Evacuated	84,063

Table 2. EPS embankments constructed in Niigata pref.

	No.	Volume(m^3)
Ministry of Land, Infrastructure and Transport	51	30,312
Japan Highway Public Corp.	21	27,196
General Road Construction	181	94,526

Niigata prefecture, many embankments were constructed for national road construction projects, 51 sites and 30,312 m^3. Also, for highway construction projects, 21 sites and volume of 27,196 m^3 EPS embankments were constructed. In Ojiya city near the epicenter, 11 EPS structures, volume of 4,215 m^3, were constructed. EPS Development Organization (EDO) and its member companies surveyed seismic damages on those EPS embankments.

Followings are the results of the survey at typical EPS embankment construction sites.

2 SURVEY OF EPS EMBANKMENTS

(1) *Locations*

Figure 3 shows locations where surveys were made. Since those locations are rather distant from the epicenter, the aim of the surveys were to check if there were any direct damage caused by the earthquake.

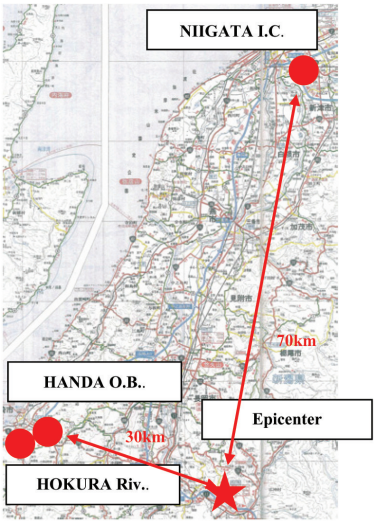

Figure 3. Locations for survey.

(2) *Niigata-Chuo interchange, Hokuriku highway*

EPS embankment on backside of C-Ramp Abutment was the first EPS embankment built in Japan for a highway road. At its design, Expressway Technology Center (EXTEC) established a committee to study experimentally and analytically on the reduction of earth pressure by EPS embankment. Also for its seismic stability, a shaking table test and 3-D FEM analysis were made to study that the embankment is stable for the Mid-Niigata class earthquake. At the construction, various measurement devices were set to confirm the analysis. JMA Seismic Intensity Scale was 5 lower at the site, no displacement was found on road surface and wall surface.

Photo 1. Niigata interchange.

Photo 2. Abutment at Niigata interchange.

Photo 3. EPS embankment backside of the abutment.

Photo 4. Step between EPS embankment and the abutment.

(3) *Embankment on backside of Hokura abutment, Hokuriku highway*

This is the location where EPS embankment was first built for a highway main road in Japan. The

Photo 5. EPS embankment backside of abutment for overbridge.

Photo 6. Road surface of backside of abutment.

Photo 7. EPS embankment for road widening project.

embankment was built with vertical wall for both sides. At its design, EXTEC established a committee to study the construction method to replace earth embankment in service to new EPS embankment. Seismic stability was also studied to verify the stability of the embankment for Mid-Niigata class earthquake. At the construction, various measurement devices were set to confirm the analysis. JMA Seismic Intensity Scale was 5 lower at the site, no displacement was found on road surface and wall surface.

(4) *EPS embankment Handa overbridge abutment, National Road No 8*

Located at Handa area, Kashiwazaki city, EPS embankment was built at backside of abutment of overbridge for Shin-Etsu Honsen on National Road No. 8. The embankment was built with vertical wall for both sides and its height is 6 m. JMA Seismic Intensity Scale was 5 lower at the site, no displacement was found on road surface and wall surface.

(5) *EPS embankment for road widening on Amegasakimaki line, Yoshikawa town, prefectural road No. 61*

EPS embankment was built on prefcutral road No. 61 Anegasakimaki line as an urgent maintenance service project. Since landslide were happen often in the area, Yasuzuka Civil Engineering Office of Niigata prefecture examined various sorts of construction methods and decided to construct an EPS embankment. It was built for a part of road widening project. The height of embankment is 7 m. JMA Seismic Intensity Scale was 5 lower at the site, no displacement was found on road surface and wall surface.

Photo 8. EPS embankment for road widening project.

3 EPS EMBANKMENT SURVEY RESULTS FOR SOUTHERN HYOGO EARTHQUAKE AND MIYAGI EARTHQUAKE

(1) *Southern Hyogo Earthquake*

North part of Awaji island as its epicenter, M7.2 class epicentral earthquake Southern Hyogo Earthquake arose on 17 Jan. 1995.

Not only roads and railways, but also whole infrastructure got severe damage by this large scale epicentral urban earthquake.

Since the damage caused were wide spread, survey was made for 10 locations as shown in Fig. 5. The results show no direct damage on any EPS embankments by the earthquake. Only slight EPS displacement caused by the settlement of foundation itself was found for one location. Port structure and

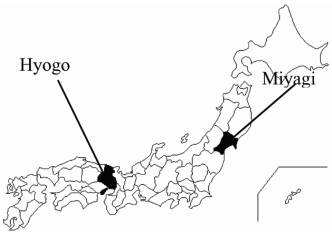

Figure 4. Hyogo prefecture and Miyagi prefecture.

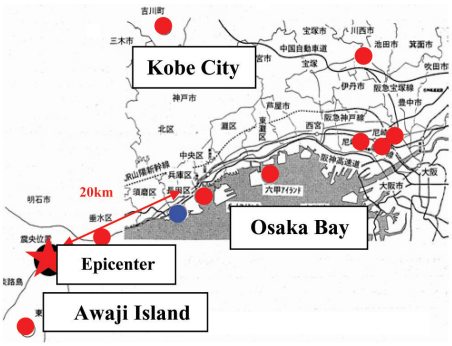

Figure 5. Location of survey for Southern Hyogo Earthquake.

other bridges got severe damage in the area where displacement was found, the bridge where EPS embankment was used was opened to the traffic just after the earthquake without loosing its function.

(2) *Miyagi Earthquake*

Recorded M5.5, Miyagi Earthquake arose 26 Jul. 2003 at pacific ocean side of north Miyagi prefecture. Over M5.0 afterquakes continued for several times. Beyond Southern Hyogo Earthquake, 2005 Gal was recorded at just 3.5 km from its epicenter.

EPS embankments were built backside of 8 abutments for 5 bridges. All of embankments were

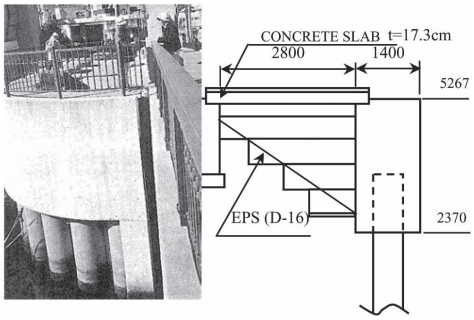

Figure 6. Slight damage on EPS embankment.

Figure 7. Location of survey for Miyagi Earthquake.

built with vertical wall for both sides. Since the acceleration recorded was much higher than that of Southern Hyogo Earthquake, stability of those embankments was concerned.

As survey results show, no damage caused by the earthquake was found on EPS embankment itself, wall structure, and foundation. Stability of those EPS embankments studied by seismic response analysis at their design were confirmed.

4 CONCLUSIONS

Survey results of damages on EPS embankments caused by several large scale earthquakes are reported. The results show that no direct and severe damage was caused by those earthquakes. The results confirm the seismic stability of EPS embankment. To build more seismic stable structure, it is required to design using seismic response analysis.

ACKNOWLEDGEMENTS

Authors acknowledge EPS Development Organization (EDO) head office for its support and help.

REFERENCES

EPS Development Organization (2003) "Survey results of damage caused by Miyagi Earthquake", 18th/Joint Technical Seminar Reports" pp. 1-1–1-10 (in Japanese).

Hotta, H. (1995). "Report of Results of Assessments of Damage to EPS Structure Caused by Earthquake", 1st/Joint Technical Seminar Reports pp. 1-16 (in Japanese).

Masuo, T. (2005). "Survey results of damage caused by Niigata Earthquake on EPS light weight embankments", Geosynthetics Technical Information, Vol. 21 No. 1, pp. 10-13 (in Japanese).