Geosynthetics - 7th ICG - Delmas, Gourc & Girard (eds) © 2002 Swets & Zeitlinger, Lisse ISBN 90 5809 523 1

Evaluation of sand-geotextile interface friction angle by a modified 300x300mm direct shear box

G.A. ATHANASOPOULOS, Professor, Dept of Civil Engineering, University of Patras, Greece
C.E. KATSAS, Civil Engineer, Garittou 70, Ag. Paraskevi, (Athens), Greece
A.A. IOANNIDIS, Civil Engineer, Andrianoupoleos 14, Didimoticho, Greece
P.C. PELEKIS, Doctoral Student, Dept of Civil Engineering, University of Patras, Greece

ABSTRACT: The design and fabrication of a metallic system which can be installed in the large shear box (300mm x 300mm) of a 100 kN direct shear machine and make it appropriate for running interface shear tests between geosynthetic-soil and geosynthetic-geosynthetic, is presented. Results are also presented of shear tests preformed with the modified shear box on interfaces between Ottawa 20-30 sand, with a void ratio e≈0.50 (D_r=95%), and a nonwoven needlepunched geotextile of four different densities. The tests were conducted under normal stresses of 45, 110, 165 and 220 kPa. The shear resistance at the interface, and the vertical displacement, were recorded during testing up to horizontal displacements of 25mm. The test results indicate that the apparent interface friction angle is independent of the geotextile density and equal to δ=0.86φ, where φ= peak angle of shear resistance of sand.

1 INTRODUCTION

Geosynthetics are currently being used in many soil engineering applications including soil reinforcement, soil drainage and as a liquid or soil moisture barriers (soil retaining structures, slopes/embankments and landfills). In these applications the geosynthetic materials are in contact with either soil materials or other geosynthetics. For the safe and economic design of the pertinent earth structures it is necessary to know the interaction mechanism at the geosynthetic-soil and geosynthetic-geosynthetic interface.

The above interaction mechanism is being studied both theoretically and experimentally during the last three decades. The research effort was initially focused on the interaction between geotextiles or geogrids and granular soils. Athanasopoulos (1993) has summarized the findings of several of pertinent studies. The interest of the researchers was also directed, in the last two decades, in the interaction mechanism between all types of geosynthetics (geotextiles, geogrids, geomembranes, geocomposites) and cohesive soils as well as in the interaction at the interface between different geosynthetics. The pertinent findings have been recently reviewed by Athanasopoulos (1996). In the last few years much of the research effort has been devoted in the interaction between geomembranes and cohesive soils (Esterhuizen et al., 2001; Ling et al., 2001), geomembranes and granular soils (Frost et al., 1999; Zettler et al., 2000), geomembranes and geosynthetics (Triplett and Fox, 2001; Hillman and Stark, 2001; Li and Gilbert, 1999) and the interface between geosynthetics and special soil materials (Aiban and Ali, 2001; Goodhue et al., 2001).

It is worth mentioning that despite the considerable amount of available data on the geosynthetic-soil and geosynthetic-geosynthetic interface behavior the current state-of-practice requires the performance of site specific and project specific laboratory testing for evaluation of the pertinent interface properties (Ling et al., 2001; Smith and Criley, 1995; Richardson et al., 1998).

The two prominent techniques for the experimental evaluation of the interaction between geosynthetic-soil and geosynthetic-geosynthetic are the direct shear test and the pull-out test. In the former test a mass of soil is forced to slide on a flat surface of geosynthetic (which is attached to a rigid plate) whereas in the latter test the geosynthetic sheet is pulled-out from a mass of soil into which is embedded. The interface direct shear test was standardized in 1991 by the American Society of Testing and Materials (ASTM D 5321) which specified the use of a large (300mm x 300mm) conventional shear box machine after appropriate modification. The pull-out test has not been yet standardized although guidelines are available by the ASTM since 1995. An European standard for the interface friction measurement (by direct shearing and tilting process) is also under development (Gourc et al., 1996).

The objective of the present paper is the description of a modified large shear box of a conventional direct shear machine which makes possible the performance of geosynthetic-soil and geosynthetic-geosynthetic interface tests. The paper also presents the results of tests on the interface of a nonwoven geotextile-sand by using the modified shear-box.

2 THE MODIFIED SHEAR BOX

The direct interface shear tests presented in this paper were obtained by using a Wyhkam Farance large shear box (300mm x 300mm) direct shear machine of controlled displacement. A cross section of the square shear box (lower part and upper part) is shown in Figure 1. The normal load (with a maximum value of 100kN) is applied hydraulically to the top plate whereas the lateral displacement (of adjustable rate) is applied through electric motors. It should be mentioned that in the direct shear machine described above the controlled displacement is applied to the lower shear box of the machine whereas the upper shear box is held in place by the reaction of the load measuring cell.

The system that was designed and fabricated in order to make the conventional shear box capable of accommodating interface shear testing consisted of the parts shown in Figure 2. These parts are placed and assembled in the square shear box in the order indicated in Figure 2 and are described in the following:

Bottom guide plate. It is a square (300m x 300m) steel plate with a thickness of 5.5mm and a circular hole at its center with a diameter of 200mm. This plate is placed at the bottom of the shear box and serves as a guide for placing the remaining parts of the assembly.

Adjustable height spacer. This spacer is made from stainless steel and fits in the circular hole of the bottom guide plate. The spacer consists of the following parts (a) two stainless steel plates of circular shape with a diameter equal to 200mm and thickness equal to 11.5mm (b) a connecting element consisting of a hollow cylinder having a diameter equal to 80mm and height equal to 32mm. This hollow cylinder is internally threaded with a coarse-pitch thread and is fixed to one of the two circular plates. A screw shaft that fits in the threaded hollow cylinder can be fastened to both circular plates by central allen screws (Fig. 3). By rotating the upper circular plate, the distance

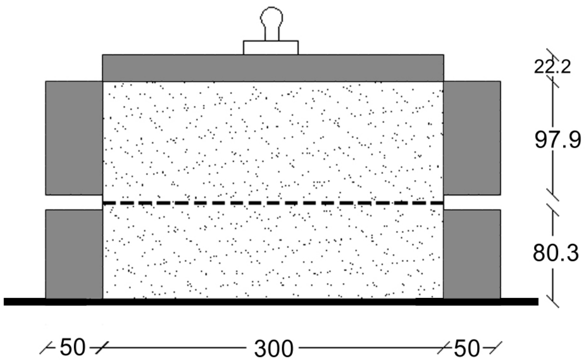

Figure 1. Dimensions of the (square) large shearbox used in the tests.

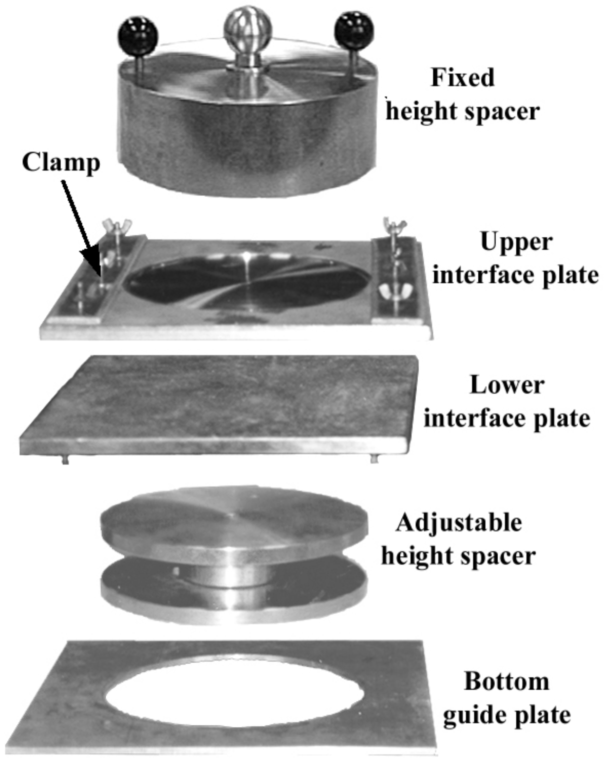

Figure 2. Parts of the mechanical system which is assembled in the large (300x300mm) shear box.

between the two plates can be adjusted with a rate of 1mm/revolution. The total height of the spacer can, thus, be varied from 55mm to more than 85mm.

Lower interface plate. It is a square (300mm x 300mm) steel plate with a thickness of 11.5mm. Its surface was roughened by gluing on it sand particles. The geosynthetic sheet is placed on this plate and fastened by the clamps shown in Figure 2. The plate sits on the spacer (described above) and on its lower side has a circular socket 2.5mm deep which fits on the upper plate of the spacer. By adjusting the spacer's height it is possible to bring the upper surface of geosynthetic to the level of the shearing plane of the shear box.

Upper interface plate. This plate is identical to the lower interface plate and is used to attach a geosynthetic sheet when the geosynthetic-geosynthetic interface resistance is tested. When a geosynthetic-soil interface strength is being tested the upper shear box is filled with soil and the normal load is applied to the rigid top plate of the shear box.

Fixed height spacer. It is a partially hollow stainless steel cylinder with a diameter of 200mm and height equal to 70mm. This spacer sits in a circular socket on the upper interface plate and has a central spherical head to which the vertical loading yoke of the machine is attached.

The assembly described above can be installed or re-installed in the shear box very easily and rapidly and can also transmit safely the forces developed during testing.

3 RESULTS OF INTERFACE STRENGTH TESTS

By using the modified shear box described in the previous section a series of direct shear tests were conducted to evaluate the interface resistance behavior between a neendlepunched nonwoven geotextile (Bondex) manufactured in Greece and Ottawa 20-30 sand. The tests were conducted on sheets of geotextile having four different densities: 135, 200, 300 and 400gr/m^2 in order to investigate the effect of geotextile density (and thickness) on the interface behavior. Table 1 summarizes some properties of the four geotextiles used in the tests which were run under normal loads of 4, 10, 15 and 20kN (corresponding values of normal stress: 45, 110, 165 and 220 kN/m^2). The rate of shearing in all tests was 1mm/min. Each test was continued until a horizontal interface displacement of 25mm was reached.

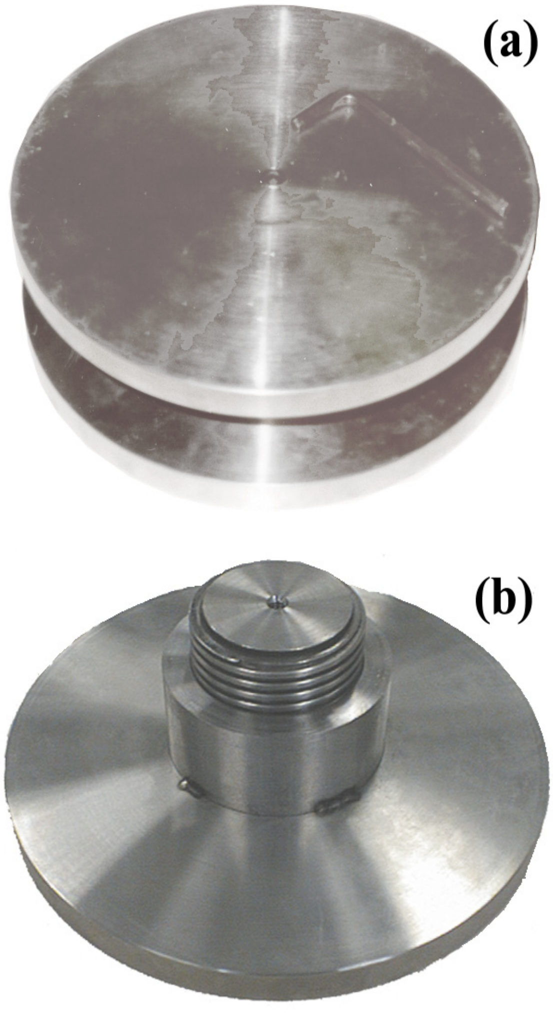

Figure 3. Adjustable height spacer (a) assembled, (b) disassembled.

Table 1. Geotextile properties.

Geotextile	Structure	Thickness (mm)	Mass per unit area (gr/m^2)	Tensile strength	
				Ultimate load (kN/m) (MD/XMD)	Elongation (%)
Bondex 135	NW*	2.3	152	7.4/9.3	91/98
Bondex 200	NW*	2.7	201	10.6/12.9	88/90
Bondex 300	NW*	3.1	271	17.0/18.1	91/91
Bondex 400	NW*	3.7	364	22.4/24.4	90/88

*Needlepunched, MD=Machine Direction, XMD=Cross Machine Direction

The Ottawa 20-30 sand used in the tests is a subrounded to rounded sand with a mean particle size of 0.7mm. The void ratio of this sand in all tests was kept constant and equal to e=0.50. This value of void ratio corresponds to a relative density D_r=95%. A number of reference tests were run on Ottawa sand in the conventional shear box to obtain the peak friction angle of the material. Typical shear stress-shear displacement and vertical displacement-shear displacement curves from these tests are shown in Figure 4. The failure envelope of Ottawa sand was derived from direct shear tests under normal stresses equal to 11, 111, 222, 333, 444, 555 and 665 kN/m^2 (Fig. 5). From the failure envelope a peak friction angle φ=36° may be estimated.

Typical results of interface direct shear tests between the nonwoven geotextile and the Ottawa sand are shown in the diagrams of Figure 6. The results of all tests were used to plot the diagram of Figure 7 which shows the interface shearing resistance for geotextile sheets having four different thicknesses. It may be easily observed that the nonwoven geotextile thickness (and density) did not affect the sand-geotextile interface strength and a unique linear failure envelope could be fitted to all data points. From the slope of the failure envelope an apparent interface friction angle δ=31° may be estimated. The position of the failure envelope also indicates the development of some adhesion ($c_\alpha \approx 7.4$kN/m^2) whose value is very small and may be considered negligible for practical applications. The friction efficiency of the particular geotextile sand combination can then be estimated to be equal to tanδ/tanφ=0.83.

4 CONCLUSIONS

A mechanical system was designed and fabricated which is used for the modification of the large (300mm x 300mm) shear box of a direct shear machine in order to make it appropriate for running interface geosynthetic-soil and geosynthetic-geosynthetic shear resistance tests. The system consists of a few metal parts that can be easily and rapidly assembled or disassembled in the shear box and is characterized by its ability to be finely adjusted in height to bring the surface to be sheared at the level of failure surface of the shear box.

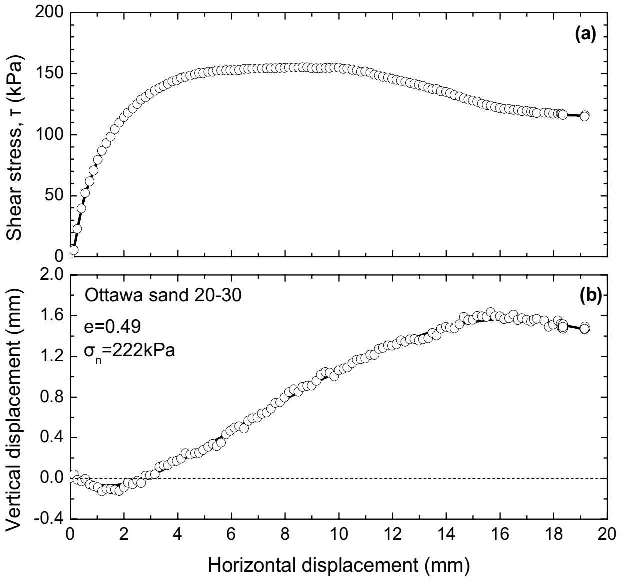

Figure 4. Shear stress and vertical dispacement vs. shear displacement diagrams for Ottawa 20-30 sand (σ_n=222 kN/m^2).

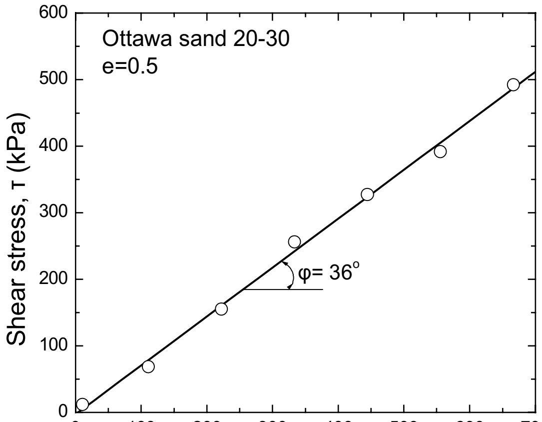

Figure 5. Failure envelope for Ottawa 20-30 sand from large shear box direct shear tests (e=0.5).

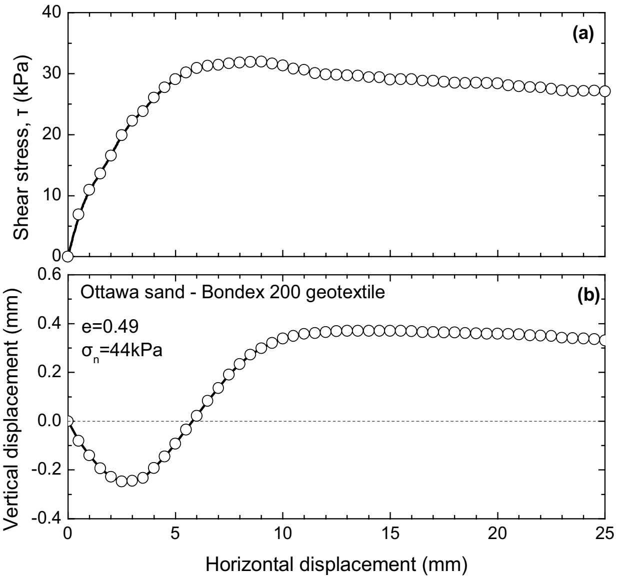

Figure 6. Shear stress and vertical dispacement vs. shear displacement diagrams for Ottawa 20-30 sand-geotextile interface (σ_n=44 kN/m^2).

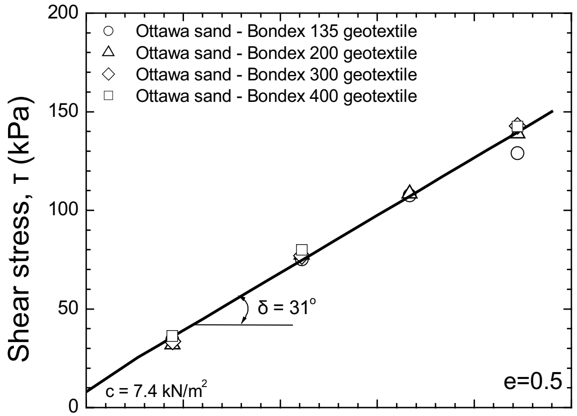

Figure 7. Failure envelope for the Ottawa sand-geotextile interface from direct shear tests in the modified shear box.

The modified shear box was used to run interface resistance tests between a nonwoven needlepunched geotextile of varying thickness (2.3mm to 3.7mm) and dry Ottawa 20-30 sand with a void ratio e=0.5 (reletive density, D_r=95%) and a peak friction angle $\varphi=36^o$. The test results indicate that the interaction behavior can be described by a linear Mohr-Coulomb failure envelope with a negligible adhesion and an apparent interface friction angle $\delta=31^o$, which is independent of the density (and thickness) of geotextile.This value of interface friction angle is lower than the peak friction angle of the tested sand. Thus, the estimated friction efficiency of the particular geotextile and sand is $\tan\delta/\tan\varphi=\tan36^o/\tan31^o=0.83$.

5 ACKNOWLEDGEMENTS

The authors express their thanks to D.K. Atmatzidis, Professor and E.G. Missirlis, Doctoral Candidate, Department of Civil Engineering, University of Patras, Greece, for the many helpful discussions and suggestions during the design and fabrication of the shear box modification system. Thanks are also expressed to E.A. Tsikourona, and V.C. Xenaki, undergraduate and graduate students, respectively, of the above Department, for assisting in the preparation of the figures of the paper.

6 REFERENCES

ASTM. Standard test method for determining the coefficient of soil and geosynthetic or geosynthetic and geosynthetic friction by the direct shear method. ASTM D 5321. Philadelphia.

ASTM. Proposed standard test method for measuring geosynthetic pullout test resistance in soil. ASTM. West Conshohocken, Pensylvania, USA.

Aiban, S.A. and Ali, S.M. 2001. Nonwoven geotextile-sabkha and sand interface friction characteristics using pull-out tests. *Geosynthetics International* Vol. 8(3):193-220.

Athanasopoulos, G.A. 1993. Effect of particle size on the mechanical behaviour of sand-geotectile composites. *Geotextiles and Geomembranes* 12(3): 255-273. Elsevier.

Athanasopoulos, G.A. 1996. Results of direct shear tests on geotextile reinforced cohesive soil. *Geotextiles and Geomembranes* 14(11): 619-644. Elsevier.

Esterhuizen, J.J.B., Filz, G.M. and Duncan, J.M. 2001. Constitutive behavior of geosynthetic interfaces. *Journal of Geotechnical and Geoenvironmental Engineering, ASCE* 127(10): 834-840.

Frost, J.D., Lee, S-W and Cargill, P.E. 1999. The evolution of sand structure adjacent to geomembranes. *Proceedings of Geosynthetics 99* Vol. 1. Boston, Massachusetts, USA.

Goodhue, M.J., Edil, T.B. and Benson, C.H. 2001. Interaction of foundry sands with geosynthetics. *Journal of Geotechnical and Geoenvironmental Engineering, ASCE* 127(4): 353-362.

Gourc , J.P., Lalarakotoson, S., Muller-Rochholz, H. and Bronstein, Z. 1996. Friction measurement by direct shearing or tilting process Development of a European Standard. *Geosynthetics: Applications, Design and Construction*. Den Hoedt and Termaat (eds): 1039-1046. Rotterdam: Balkema.

Hillman, R.R. and Stark, T.D. 2001. Shear strength characteristics of PVC geomembrane-geosynthetic interfaces. *Geosynthetics International* 8(2): 135-162.

Li, M-H and Gilbert, R.B. 1999. Shear strength of textured geomembrane and nonwoven geotextile interfaces. *Proceedings of Geosynthetics 99* Vol. 1. Boston, Massachusetts, USA.

Ling, H.I., Pamuk, A. Dechasakulsom, M., Mohri, Y. and Burke, C. 2001. Interactions between PVC geomembranes and compacted clays. *Journal of Geotechnical and Geoenvironmental Engineering, ASCE* 127(11): 950-362.

Richardson, G.N., Thiel, R. and Mackey, R. 1998. Designing with needlepunched reinforced GCLs: Stability fundamentals. *Geotechnical Fabrics Report*: October-November, 22-27.

Smith, M.E. and Criley, K. 1995. Interface shear strength is not for the uninitiated. *Geotechnical Fabrics Report*: April, 28-31.

Triplett, E.J., and Fox, P.J. 2001. Shear strength of HDPE geomembrane/geosynthetic clay liner interfaces. *Journal of Geotechnical and Geoenvironmental Engineering, ASCE* 127(6): 543-552.

Zettler, T.E. Frost, J.D. and DeJong J.T. 2000. Shear-induced changes in smooth HDPE, geomembrane surface topography. *Geosynthetics International* 7(3): 243-267.