mécanismes et comportement
méthodes de dimensionnement

mechanisms and behaviour
design methods

C.R. Coll. Int. Renforcement des Sols. Paris 1979.

AL-YASSIN Z. et HERRMANN L.R.

University of California, Davis, U.S.A.

Finite element analysis of reinforced earth walls

Etude des murs en terre armée par la méthode des éléments finis

L'étude des structures en terre armée par la méthode des éléments finis est présentée. La comparaison est faite entre les résultats obtenus et les résultats expérimentaux. Les contraintes et les déformations dans le sol, ainsi que les forces dans les armatures sont comparées.

L'analyse par la méthode des éléments finis utilise une représentation composite des structures en terre armée. Elle incorpore les effets non-linéaires et inélastiques dus au glissement de l'armature, ainsi que le comportement non-linéaire du sols, les effets d'excavation et de remplissage, la plastification de l'armature, et les effets composites du bord. Les procédures de détermination des différents paramètres sont mentionées.

Introduction

Reinforced earth walls are composite systems in which tension resistant members are incorporated into soil masses as reinforcement. They are constructed by laying steel (or other tension resistant material) strips or mats in regular patterns as the soil is placed.

There are two general approaches to the analysis of reinforced soil systems involving respectively discrete and composite representations of the constituents. The two approaches are described in detail in Ref. (9). The results presented herein are based on a 2-D finite element analysis, Ref. (11), utilizing the composite approach.

In a composite representation, for the purpose of analysis, the reinforced system is modeled as a locally homogeneous, orthotropic material termed the "composite material" (e.g., see (14)). When performing a finite element analysis of a composite representation of a reinforced material, the body is represented by an array of continuum elements whose boundaries need bear no spatial relationship to the geometric arrangement of the reinforcing members. The "composite" material properties assigned to the continuum elements reflect the properties of the matrix material and the reinforcing members, and their composite interaction.

The interaction of the reinforcement and the soil is highly nonlinear and inelastic. In a direction normal to the reinforcement, the soil and reinforcement experience the same displacement, however, the tangential displacements differ by a relative movement δ. In the case when the attainable bond stress has been fully mobilized, the relative movement δ is the resulting slippage of the reinforcement. The presence of a flexible facing plate results in a nonuniform displacement and stress distribution along the face of a reinforced earth wall, which is an example of an edge effect. Due to this edge effect, there is a local displacement (in addition to possible slippage) of the reinforcement relative to the average displacement of the composite system. By an appropriate selection of the spring coefficient, it is possible to model this relative displacement (and hence the edge effect) by the relative movement between soil and reinforcement, which results from the presence of the fictitious bond springs introduced as part of the reinforcement slippage model (Ref. (8)). In Ref. (10) a procedure is developed for determining the appropriate value for the bond spring coefficient, and an example is given to illustrate the success with which edge effects are captured by the model.

Applications

The analysis procedures for reinforced earth, developed in Refs. (9) and (10), have

been incorporated in a finite element program for earth structures, Ref. (11). In this section, comparisons of fintie element predictions and experimental measurements are given for three reinforced earth walls.

The U.S. Army Engineer Waterways Experiment Station Soils and Pavement Laboratory (WES) personnel constructed, instrumented, and loaded to failure two reinforced earth walls(1). A composite finite element analysis was performed of one of the walls and the results compared to the experimental measurements. The wall was reinforced with galvanized steel strips (.025" x 4") placed at 2' vertical and 2.5' horizontal spacings; a detailed illustration of the method of connecting the reinforcing strips to the facing plate is shown in Figure 1. The wall was constructed in twelve one-foot lifts.

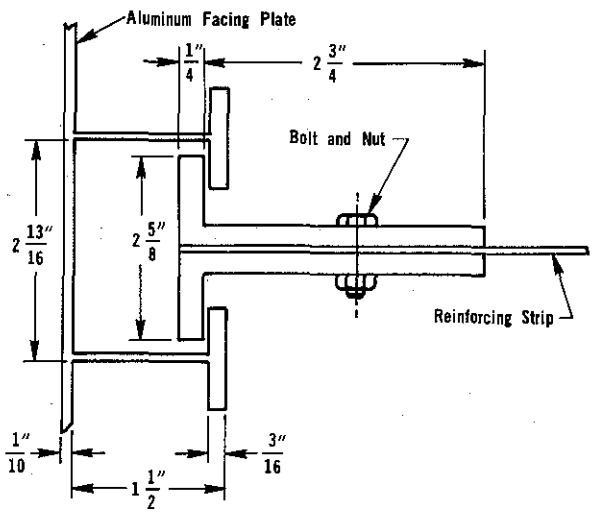

FIG. 1 Detail of Reinforcement Facing Plate Connection - WES Wall

The grid that was used in the finite element analysis is shown in Figure 2. Elements 1-18 are continuum elements representing the existing soil foundation. Elements 19-60 are composite elements representing the reinforced earth, and Elements 61-66 are one-dimensional elements representing the facing plate. Each of the six layers of elements in the wall were placed in a separate construction increment. Because the wall was constructed against an existing vertical soil face, it was assumed that a well-defined interface existed at this location. This interface was modeled by introducing a frictional-cohesion interface between elements 11-60 and an assumed rigid surface (this rigid surface is introduced into the analysis by cantilevering a relatively rigid bending member upwards from the bottom right-hand node; the frictional-cohesional surface is placed between this fictitious bending member and the back of the reinforced earth); the values of cohesion (.05) and friction ($\tan\phi$ - .67) given in Ref. (2) were used. Duncan's characterization, Ref. (7), was used to represent the foundation soil. With the exception of the value for Poisson's ratio, the parameters given in Ref. (2) were used, i.e., $n = .54$, $K = 326$ (it was assumed that $K_{ur} = K$), $R_f = .9$, $\gamma_d = 100$ pcf, $\phi = 32°$ and $c = 4$ psi. The rather arbitrary value (.33) of Poisson's ratio assumed in Ref. (2) was replaced by an equally arbitrary value for the bulk modulus of 1750 psi (selected to give a value of Poisson's ratio of approximately .33 for 14 ft. of overburden and non-failure conditions). Duncan's characterization was also used for the sand in the wall; the parameters given in Ref. (2) are $n = .5$, $K = 580$ (K_{ur} assumed to be equal to K), $R_f = .85$, $\phi = 36°$, and $c = 0$. The sand density (including weight of water) was taken to be the average of the measured densities reported in Table 1 of Ref. (1), i.e., $\gamma_d = 102$ pcf. A constant value of 1200 psi was used for the bulk modulus (selected to yield, under ten feet of overburden and for a non-failure state, a value of Poisson's ratio of approximately 0.3). The properties assigned to the distributed reinforcement for elements 25-60, were those of the reinforcing strips, i.e., $E = 3.1 \times 10^7$ psi, $E_p = 2 \times 10^5$ psi, $Y = 51000$ psi, $A = 0.1$ in^2, and $P = 8$ in. (perimeter). The properties of the distributed reinforcement in elements 19-24 were selected in an attempt to model the behavior of the connections between the reinforcing strips and the facing plate (see Figure 1). One would, ideally, prefer to base this characterization on experimental results obtained from a test of the embedded (in soil) connection; in the absence of such information, a finite element analysis of the connection and the neighboring soil was performed. The results of this analysis yielded an effective modulus (assigning $A = 0.1$) of $E = 9.5 \times 10^5$ psi. The predicted failure load (when the deformation of the connection is sufficient to permit the angles attached to the strips to disengage from the angles attached to the face plate) was considerably higher than the yield stress of the strips; hence, the effective yield stress was taken to be 90% of that of the strips (reduction due to loss in area resulting from the presence of the bolt hole), i.e., $Y = 46000$ psi.

The spring coefficient used in the bond model (see Ref. (10)) was calculated from Eq. (1) of Ref. (10); i.e., $k = 0.463$ in^{-1}. The determination of an appropriate value for the coefficient of friction between the reinforcing strips and the soil was quite difficult. A coefficient of friction for contact of galvanized steel and sand measured in a shear box, is given in Ref. (1), i.e., $f = \tan\phi_f = .32$. It is interesting to note that similar measurements for sand and steel reported in Ref. (5) yielded approximately .5. However, an inspection of the gradients of the measured strip forces near the free ends of the

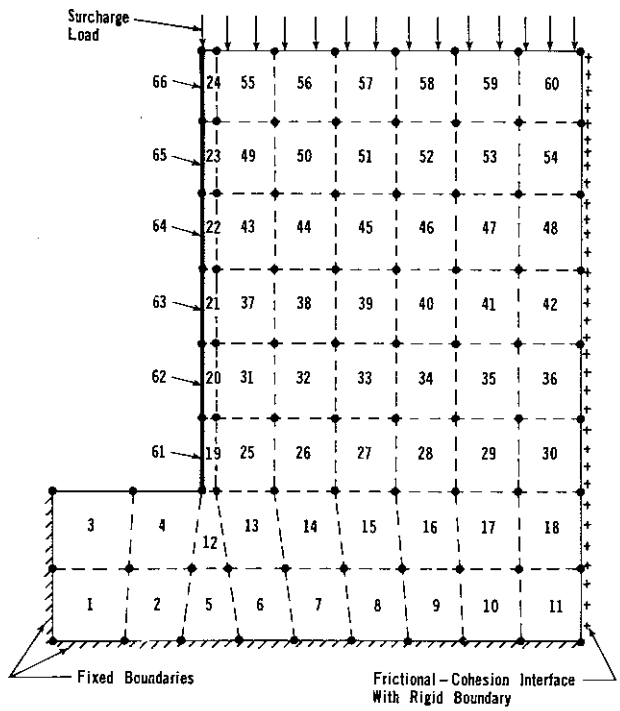

FIG. 2 Finite Element Grid - WES Wall

strips indicated considerably higher values (these measurements give an average value of about .55). Similar discrepancies between measured values of friction from shear box tests and values found in strip pull-out tests are observed in the results given in Refs. (4,6). For the tests from (6), which appear to be the most reliable, the ratio of the two coefficients is approximately 1.63. One possible explanation for the discrepancy, is that the shear box experiment measures the dynamic coefficient of friction while what is actually needed is the static coefficient. Other explanations include possible inadequacy of the plane strain approximation and the effect of possible initial non-straightness of the strips, Ref. (4). Ratios of static and dynamic coefficients of 1.1 and 2 are reported in the literature. From the pull-out measurements given in Ref. (6), an average ratio (between the static and dynamic coefficients) of 1.53 was found; this value applied to .32 yields .49. Somewhat arbitrarily a value of .52 was used in the analysis.

One-dimensional elements (61-66) were used to model the facing plate. Because of the hinges in the facing plate (at two foot vertical intervals) it was assumed that the bending stiffness was negligible; the area (per unit width) and the elastic modulus were selected to model possible buckling of the facing plate. In the absence of experimental evidence a simple strength of materials analysis was performed to determine the buckling load. Two possibilities for buckling exist; i.e., buckling of the 2 13/16" length between neighboring stiffeners and buckling of the 2' length between neighboring hinges. In the latter case, the rotational support offered by the stiffeners was included. These two analyses yielded respectively 45200 psi and 4820 psi; thus Y was taken to be 4820 psi (E_p was taken to be zero). Finally, the resistance offered by the facing plate to edge effects (see Ref. (9), i.e., to the prevention of the movement of the strips relative to the average displacement of the soil) was modeled by boundary springs, along the front edge of the wall, between the soil and the distributed reinforcement. The spring coefficient was determined (see Ref. (9) and the third example in this section) by performing a discrete finite element analysis (average properties were used for the sand) of a portion of a reinforcing strip, and one foot of soil and facing plate on either side; the analysis yielded an effective spring coefficient of 14100 lb/in.

Twelve solution increments were used in the analysis. The first one was used to initialize the stress state in the foundation material. The next six were used to construct the wall (two foot lifts), and the final five were used to surcharge the wall. The predicted results were compared to the experimental measurements given in Ref. (2). Figure 3 compares computed and measured strip forces, at the end of construction and just prior to failure, for strips 1 ft., 5 ft., and 9 ft., from the base of the wall.

In view of the considerable scatter in the experimental results (see Ref. (1)), the agreement is judged to be very good. The one disappointing aspect of the finite element analysis is that failure was not pre

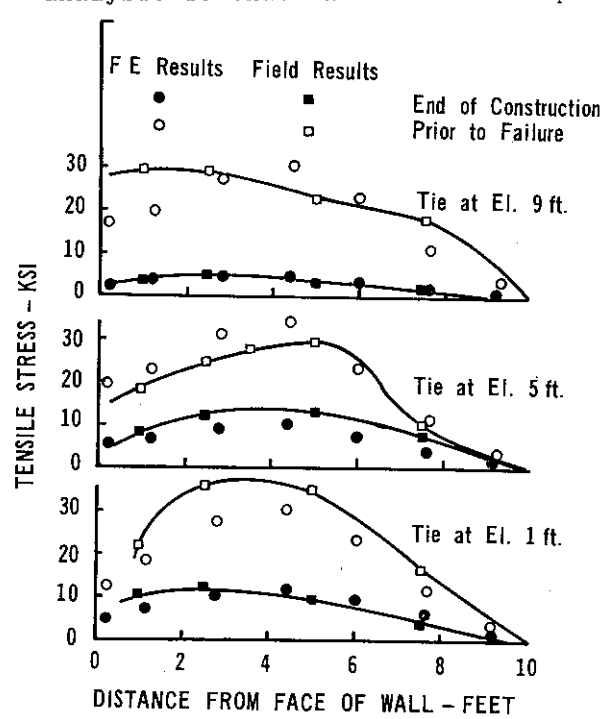

FIG. 3 Tensile Stress Distribution along Strips - WES Wall

dicted even though a second analysis carried the surcharge 50% beyond the observed failure load; even though local buckling of the face plate and strip yielding were initiated at that point, imminent failure was not apparent. It is felt that the inability to predict failure stems from one or more of the following reasons. The validity of the soil characterization for failure conditions is very much in question. The simple analyses used to predict the stiffness and failure characteristics of the reinforcement to face plate connection and the buckling strength of the face plate may be quite conservative.

Laboratory model tests on several reinforced earth walls were performed at UCLA by Lee, et al, Ref. (12). A composite finite element analysis was performed of one such wall, namely the wall of test 54 (see Ref. 12)), referred to in this paper as the UCLA wall. The results obtained from the analysis were compared to the experimental measurements. The UCLA wall was constructed in 1.0 inch layers to a height of 17 inches before it failed by tie breaking; tie length was 16 inches. A detailed description of the wall and the measured results are given in Ref. (12).

The grid used in the finite element analysis of the UCLA wall is shown in Fig. 4. The reinforced earth and the backfill were represented by composite and continuum elements respectively, as shown in Fig. 4. Each of the ten layers of elements in the wall were placed in a separate construction increment. Because the model was constructed in a plywood box, well defined interfaces existed at the base of the wall and at the back of the backfill. These interfaces were modeled by introducing frictional surfaces in the same manner as was done in modeling

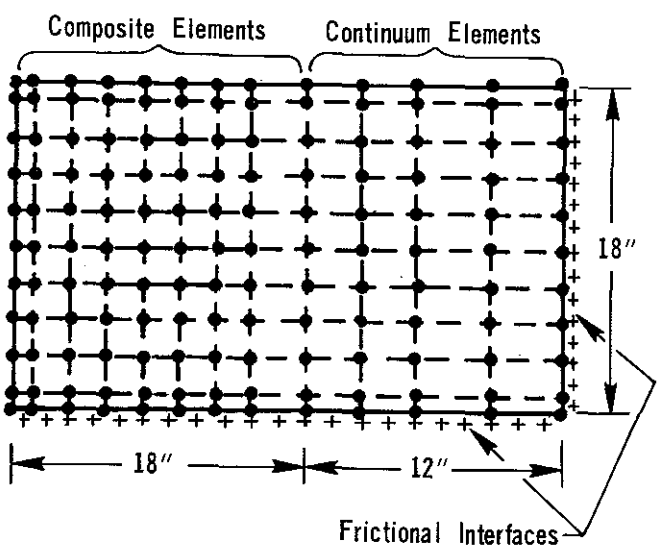

FIG. 4 Finite Element Grid - UCLA Wall

the WES wall. A friction coefficient between the sand and the plywood of .70 was used. Duncan's nonlinear soil characterization was used to represent the wall and the backfill material. Insufficient information is given in (12) to establish the several parameters defining the characterization. In the absence of experimental evidence, the parameters, given in (7) for a sand that appears to be similar in nature to the one used in the test, were selected. The selected values were $k = 280$, $k_{ur} = 840$, $n = .65$, $c = o$, $\phi = 31°$ (value reported in (12)), $R_f = .93$. Since these values were not based on experimental results for the material used in the wall, they must be considered tentative. The results of the initial finite element analysis of the model indicated that the selected soil properties were less stiff than those of the sand used in the model; rather arbitrarily, the value of R_f was changed to .73 (a value within the range of reported values (7)) in order to yield a more favorable comparison of predicted and measured values. A constant value of .3 was used for Poisson's ratio (the material involved is a loose dry sand with relative density, D_r of 20%). The sand density was taken to be $\gamma_d = 85$ pcf ($.049$ lb/in^3), as reported in (12). The properties assigned for the distributed reinforcement were those of the reinforcing ties (made of household aluminum foil), i.e., $E = 10 \times 10^6$ psi, $E_p = 5 \times 10^5$ psi, $y = 6000$ psi (this value was obtained from laboratory tests performed on specimens of household aluminum foil), $A = 7.75 \times 10^{-5}$ in^2, $P = .311$ inch.

The restraint of the facing (.012 inch thick aluminum sheet formed in 1.0 inch diameter semicircles) to slippage of the reinforcing elements was modeled by distributed springs along the face of the wall. An approximate value for the spring coefficient was determined from a 2-D finite element analysis of the facing and adjacent soil, i.e., $k = 1630$ lb/in. Because of the large ratio (6/1) of the horizontal to vertical tie spacing, a 3-D finite element analysis of a 1.0 inch high x 6.0 inches deep cell of the facing and the adjacent soil would have yielded a more accurate value; in the absence of such an analysis, the value mentioned above was used.

The spring coefficient used in the reinforcement-soil bond model was calculated from Eq. (1) of Ref. (10), i.e., $k = 7.8$ in^{-1}. The coefficient of friction between the reinforcing ties and the soil was taken to be $\tan \phi_f = .601$, as reported in Ref. (12).

Ten solution/construction increments were used in the analysis of the UCLA wall. The predicted results were compared to the experimental measurements. Fig. 5 compares computed and measured strip forces just behind the wall at different stages of construction. The predicted and measured lateral soil stresses are compared in Fig. 6,

and Fig. 7 compares predicted and measured lateral movements of the face of the wall.

In view of the considerable scatter in experimental results (see Ref. 12)), the overall agreement is judged to be good. The discrepancies between experimental and finite element results stem from one or more of the following reasons. The validity of the soil characterization for failure and

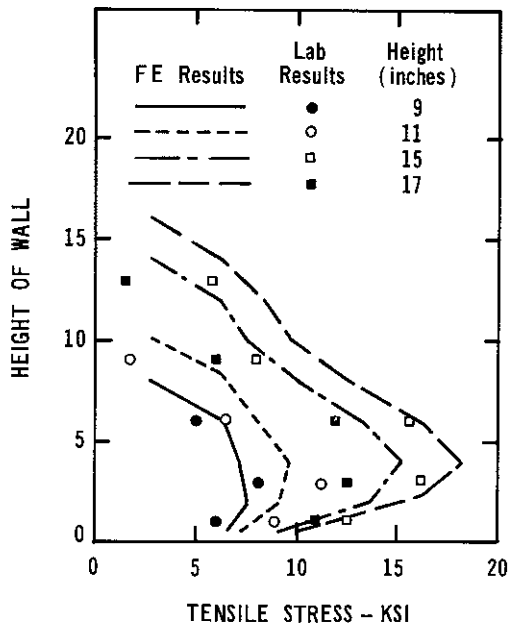

FIG. 5 Strip Stresses near Face of UCLA Wall

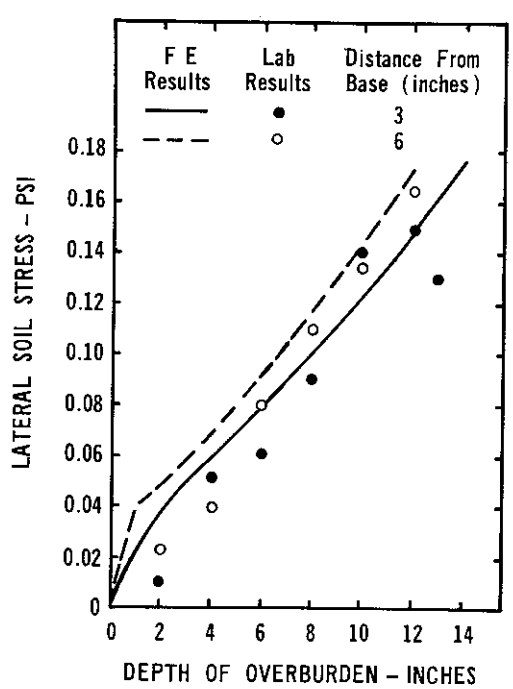

FIG. 6 Lateral Soil Stress near Face of UCLA Wall

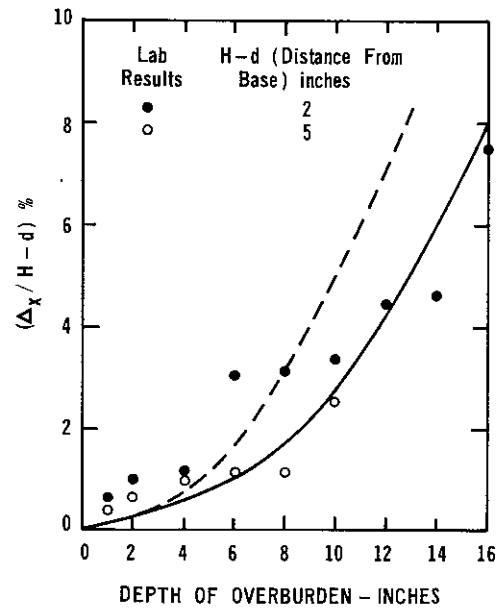

FIG. 7 Lateral Strain at the Face of UCLA Wall

near failure conditions is in question. The use of a 2-D analysis for evaluating the coefficient of the slippage resistant springs at the face of the wall may be quite inaccurate. Incorrect modeling of newly placed soil.

Laboratory model tests on two reinforced earth walls constructed, instrumented, and loaded to a maximum surcharge load of 5.0 psi were performed at U.C. Davis (13). A composite finite element analysis of one of these walls was performed and the results compared to the experimental measurements. Figure 8 shows a cross section of the wall and the detail of connecting the strips to the facing. The wall was built in sixteen one-inch lifts. The interfaces at the base of the wall and at the back of the backfill (lined with Marlite (Marlite is a registered trademark of the Uniroyal Corporation) to reduce friction) were modeled as frictional surfaces with a coefficient of friction between sand and Marlite of .39.

The parameters defining Duncan's nonlinear soil characterization used to represent the wall and the backfill material were reported in Ref. (5); i.e., $k = 1820$, $Kur = 2730$, $n = .48$, $C = 0$, $\phi = 38°$, $R_f = .88$. A constant value of .4 was used for Poisson's ratio. The sand density was taken to be 100 pcf (.058 lb/in^3), as reported in Ref. (13). The properties assigned to the distributed reinforcement were those of the reinforcing elements (made of shimstock steel), i.e., $E = 30 \times 10^6$ psi, $Ep = 6 \times 10^5$ psi, $Y = 60000$ psi, $A = .004$ in^2, and $P = 2.008$ inches. A value of 2.22 in^{-1} was calculated for the spring coefficient used in modeling the reinforcement-soil bond (see Eq. (1) of Ref. (10)). The coefficient of friction between the reinforcing strips and the soil was taken to be $\tan \phi_f = .38$. Val-

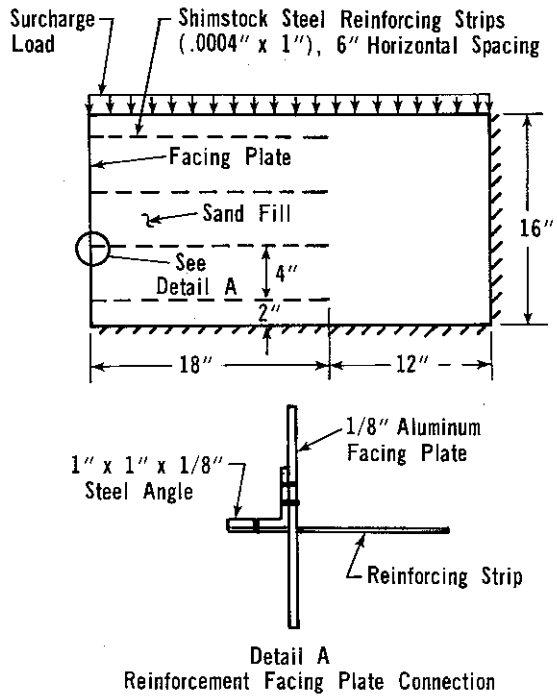

FIG. 8 Cross-Section of UCD Wall

ues of ϕ_f ranging from 20° - 23° for the second, third, and top strips respectively, were reported in Ref. (13). Lower values of ϕ_f, varying between 15.6° and 17.3°, were reported for the bottom strips; it appears that friction was not fully mobilized in the bottom strips, hence, possibly rendering the values reported for these strips meaningless.

The restraint of the facing plate to slippage of the reinforcing elements was modeled by distributed springs placed between the soil and the reinforcement along the front face of the wall. The value of the spring coefficient was determined by performing a finite element analysis of the connection between the facing plate and the strips and the adjacent soil. The analysis determined the relative displacement of the end of the strip to the average (composite) displacement of the surrounding facing caused by a unit force in the strip. The ratio of these quantities gave the required spring coefficient. A cell containing a single reinforcing strip and surrounding soil with a 4" x 6" rectangular section was isolated as shown in Fig. 9. In order to reduce the analysis of the cell from three dimensions to two, it was approximated by a 4.74 inch diameter circular cell. The diameter of the axisymmetric approximation was selected such that a concentrated load, P, applied to the center of the "circular" facing plate produces the same displacement as when applied to the center of the rectangle, see Ref. (15). The properties used for the facing plate were those of aluminum, i.e., $E = 10 \times 10^6$ psi and $\nu = .33$. The steel angle was modeled by a 1.0 inch diameter circle; the properties of this portion of the plate are those of steel and aluminum combined, i.e., $E = 20 \times 10^6$ psi and $\nu = .31$. The soil was assigned an average modulus value of 600 psi and a constant Poisson's ratio of .4. A unit load was applied to the center of the circular cell; the resulting deflected profile as determined by an axisymmetric finite element analysis is shown in Fig. 9. The relative displacement δ, of the end of the reinforcing strip and the average displacement of the surrounding facing was found, and an associated spring coefficient, $k = 1/\delta$, of 47,000 lb/in was calculated.

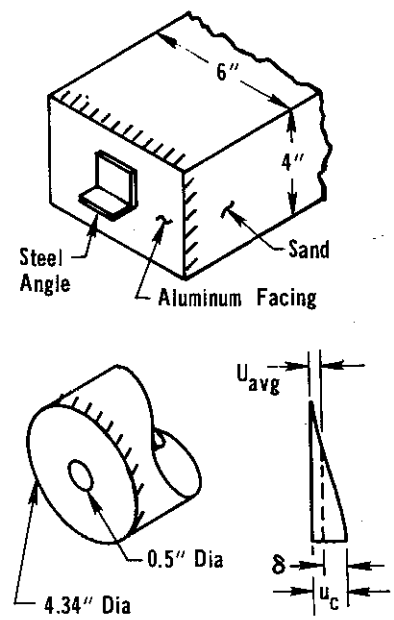

FIG. 9 Illustration for Finding Facing Spring Coefficient - UCD Wall

Eight solution increments were used in the analysis of the wall. The first four were used to construct the wall (in four inch lifts), the last four were used to surcharge the wall. Values of strip stresses developed during surcharge loading were compared to the experimental measurements reported in Ref. (12), as shown in Figure 10.

With the exception of the stresses in the bottom strip, the agreement between predicted and measured values is excellent.

Conclusions

The comparisons between finite element predictions and experimental measurements, demonstrate the capability of the composite finite element analysis to predict the behavior of reinforced earth walls. The computer cost, of the results presented herein, are in the range of $20 per analysis. Improvements are clearly needed in two areas, i.e., characterization of soil behavior for near failure and failure states and a more

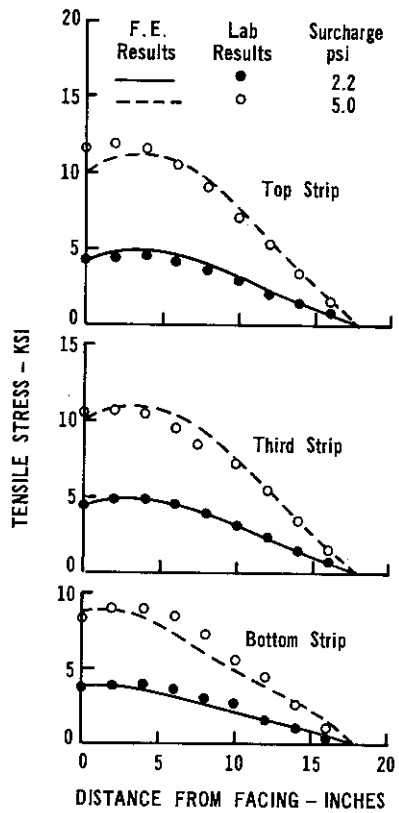

FIG. 10 Tensile Stress Distribution along Strips - UCD Wall

reliable laboratory procedure for measuring the coefficient of friction between the reinforcing members and the soil.

Acknowledgements

The research reported in this paper was conducted, in part, under National Science Foundation Grant NSF-ENG-75-17368.

References

1. Al-Haussaini, M., and Perry, E.B., "Effect of Horizontal Reinforcement on Stability of Earth Masses," Technical Report S-76-11, Soils and Pavements Laboratory, U.S. Army Eng. Waterways Station, Vicksburg, Miss, Sept. 1976.

2. Al-Haussaini, and Johnson, L.D., "Finite Element Analysis of a Reinforced Earth Wall," Technical Report S-77, Soils and Pavements Design Laboratory, U.S. Army Eng. Waterways Station, Vicksburg, Miss., May 1977.

3. Al-Yassin, Z., "Analysis and Design of Reinforced Earth Walls," Dissertation in partial fulfillment of the Degree of Doctor of Philosophy, University of California, Davis, 1979.

4. Bacot, J., Iltis, M., Lareal, P., Paumier, T., and Sanglerat, G., "Study of the Soil Reinforcement Friction Coefficient," Proceedings of the ASCE Symposium on Reinforced Earth, Pittsburg, April 1978.

5. Bajuniemi, R.L., "Negative Skin Friction on Piles," Thesis in partial fulfillment of the Degree of Masters of Science, University of California, Davis, 1973.

6. Chang, J.C., "Earthwork Reinforcement Techniques," Report CA-DOT, TL-2115-9-74-37, Transportation Laboratory, Department of Transportation, Division of Highways, Sacramento, California, Nov. 1974.

7. Duncan, J.M., and Wong, K.S., "Hyperbolic Stress-Strain Parameters for Nonlinear Finite Element Analyses of Stresses and Movements in Soil Masses," Report E-74-3 to NSF, College of Engineering, University of California, Berkeley, July 1976.

8. Herrmann, L.R., "Finite Element Analysis of Contact Problems," J. of Eng. Mech. Div. of ASCE, Vol. 104, No. EM5, Oct. 1978.

9. Herrmann, L.R. and Al-Yassin, Z., "Numerical Analysis of Reinforced Earth Systems," Proc. of the ASCE Symposium on Reinforced Earth, Pittsburg, April 1978, (preprint 3125).

10. Herrmann, L.R., "Nonlinear Finite Element Analysis of Frictional Systems," Vol. 2, Proceeding of the International Conference on Finite Elements in Nonlinear Solids and Structural Mechanics (Tapir Publishers), Geilo, Norway, Aug. 1977.

11. Herrmann, L.R., "User's Manual for REA (General Two-Dimensional Soils and Reinforced Earth Analysis Program)," Department of Civil Engineering Report, University of California, Davis, Jan. 1978.

12. Lee, K.L., Adams, B.D., and Vagneron, J.J., "Reinforced Earth Walls," Mechanic and Structures Department, Report 7233, UCLA, April 1972.

13. Mitchell, J., "Investigation of Friction in Reinforced Earth," Thesis in partial fulfillment of the Degree of Masters of Science, University of California, Davis, 1978.

14. Romstad, K.M., Herrmann, L.R., and Shen, C.K., "Integrated Study of Reinforced Earth - 1: Theoretical Formulation," Journal of Geotechnical Engineering Division, ASCE, Vol. 102, No. GTS, May 1976.

15. Timoshinko, S., and Woinowsky-Krieger, S., "Theory of Plates and Shells," Published by McGraw-Hill, Second Edition, 1959.