HAAS, W. M.
Michigan Technological University, Houghton, Michigan, USA

Geotextiles in Tailings Dike Construction: Laboratory and Field Observations

Les géotextiles dans les digues en stériles: observations en laboratoire et sur le terrain

An experimental dike built to contain tailings by maximizing the use of waste materials in its construction is described. Geotextiles were used to insure the integrity of a blanket drain placed within a starter dike. The results of an equivalent opening size test were used to make a preliminary selection, followed by a permeability-type test. The amount of tailings passing through the geotextiles in this test was used to further narrow the field of candidate fabrics. Field experience in the construction of an experimental dike 800 meters long showed relatively few problems. Based on the test program and the field experience, a list of items to consider in the selection of fabrics to be used in the retention of tailings is suggested.

Voilà une description d'une digue expérimentale construite pour contenir les dépots de résidu en stérile de mine, en utilisant au maximum les matériaux de rebut (déchets). Les géotextiles étaient utilisés pour assurer l'intégrité du drain "de couverture" placé à l'intérieur de la digue initiale. Pour faire la sélection préliminaire, on se servait du résultat d'un essai de dimension d'ouverture équivalente suivi par un essai de perméabilité. La sélection était encore rétrécie en employant la quantité de résidu (en stérile de mine) qui percole à traverse le géotextile dans cet essai. La construction d'une digue expérimentale de 800 m de longueur, sur le terrain, démontrait peu de problèmes. Basé sur le programme d'essai et l'expérience sur le terrain, voici un liste de considerations dans la sélection de textile utilisé à retenir les residus en stérile de mine.

INTRODUCTION

Large quantities of solid waste materials are produced as a result of the mining and processing of mineral ores. Depletion of richer ores has led to the mining of lower-grade ores with lower recovery factors and consequently even larger proportions of waste material. To liberate the mineral values from the ore, it is often necessary to grind the ore down to a very fine powder, thus most of the resulting tailings are finer than 0.075 mm (US sieve 200). The typical recovery process produces large quantities of slurry which tend to form unstable deposits. These must be contained behind suitable dikes.

The design and construction of tailings retention structures depends on many factors. For example, the Canadian Department of Energy, Mines, and Resources has pointed out in its Tentative Design Guide for Mine Waste Embankments in Canada:

> "The design of mine tailings embankments should consider the economics of alternate sites, types of embankment and methods of waste disposal; these will be interdependent. The availability of construction materials, the quantities and characteristics of the wastes, climate, topography, and the nature of the foundations at alternative sites will all be factors" (4).

It is important that the retention structures be designed and constructed to safely store the wastes. Furthermore, as there is no fiscal return from them, the storage system must be as economical as possible.

In some cases, the dam is immediately constructed to the full height required for life-of-mine. This has the advantage that it is easier to control the construction, therefore easier to build a safe dam. Also, the filling process is simpler (and less costly) to control. It is often possible to let the tailings spill into the basin with a minimum of daily attention. In short, this is the low-maintenance facility.

Such construction may be costly, however, and requires a capital investment to be made long in advance of realizing an economic return from the mining venture. Thus there is considerable interest in tailings dike systems which can be constructed only as they are needed, and in making maximum use of the tailings as the construction material.

Three basic methods have evolved for construction with tailings: the upstream method, the downstream method, and the centerline method (4). In the upstream method, a starter dike is constructed of natural soil, and the slurry is spiggoted from the upstream shoulder (Fig. 1). The natural sedimentation process results in the coarsest portion of the tailings being deposited adjacent to the starter dike, with progressively finer material deposited further out into the pond. The clear water is decanted off in a suitable manner. When the basin formed by the starter dike is full, the

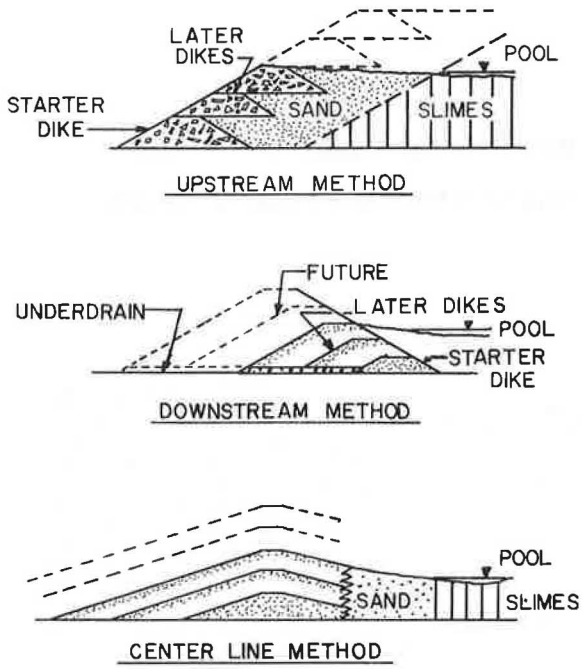

Fig. 1 Three Basic Methods of Constructing Dikes from Tailings.

"sands" are bulldozed or draglined up to the top of the starter dike to form a second level or lift, typically 2 to 8 meters high. Alternately, natural soils may be used. The tailings pipeline is then raised to this new level and filling continued. The method is relatively simple and inexpensive, and can work well if the composition of the tailings is such that an adequate amount of sand or course material is produced. There is one major disadvantage, however, and that is when the dike is raised to large heights, the potential slope failure surface no longer passes through the coarse, relatively stable sands but through the finer "slimes" which may not have sufficient strength to resist shearing (3).

This problem is overcome in the downstream method, in which the sand is removed from the beach and placed on the downstream slope. Alternately, the sand may be separated from the slimes by hydrocycloning, with the sand then being placed directly on the downstream slope (5). Thus the coarse free-draining material is placed where it will be most advantageous. Also, this results in a wide base of stable material such that the critical surface passes through the coarse material only. While this method generally results in a safe dam, it requires a much greater quantity of sand, plus the continual extra cost of equipment to shift the sand. If it is difficult to obtain sufficient coarse material in a given case, this method may not be feasible.

The centerline method is similar to the downstream method in that coarse material from the beach is placed on the downstream side, but the centerline or axis of the dike remains fixed, rather than shifting upstream or downstream as in the previous methods.

Although these methods are attractive because of their simplicity and relatively low cost, they cannot be used in all situations. For example, if the grind of the tailings is very fine, there simply will not be enough coarse material present for any of the above methods to be successful. Also, in the cases where it is desired to raise a filled basin above its original design level, the foundation of the dike may of necessity be on the relatively weak fines, thus sharing the disadvantage of the upstream method. Therefore innovative methods must be developed which are both safe and economical.

As the key to success in earth structures of this kind is drainage, there should be appropriate uses for geotextiles. It is the purpose of this paper to examine some of these possibilities in a specific case.

ORIGINAL CONCEPTS OF FABRIC UTILIZATION

As the original tailings basin in this case study filled up, it became necessary to find additional storage space. Building additional basins on adjacent land was deemed too costly. Therefore other approaches were sought. These generally focused on continuing to use the existing "full" basin by piling the future tailings on top of the tailings already there, and to use the tailings as construction material to the greatest extent practical.

In 1971 a homogeneous cross-section dike was built using tailings as the construction material (1). It was located on a foundation of well drained coarse tailings. In anticipation of the required future construction, exploration was carried out on portions of the basin that were not so well drained and which contained finer grained tailings. Samples were analyzed for shear strength (2), (10) and susceptibility to frost action (9). A study was made of the possibilities of hydrocycloning to obtain coarse tailings for some form of hydraulic construction, but it was concluded that obtaining enough coarse material would be difficult, perhaps impossible (5). Therefore a modified homogeneous cross-section with a blanket drain was selected.

The earlier dam showed a marked susceptibility to erosion (1), therefore it was considered very important to provide adequate filters to prevent piping (6), (8). In addition, stability analysis indicated that a dike could be built if there were adequate provision for drainage of the foundation tailings (10). A blanket drain would thus serve to drain the foundation as it came under load from the embankment, and serve as a toe drain to the tailings slope which would be eventually raised above the starter dike. Both the blanket drain and the tailings fill above it would be placed by conventional earthmoving equipment. Therefore to create the new storage basin, modified homogeneous dam sections would be placed around the perimeter of the existing basin. To gain practical experience with this method before construction became urgent, a trial embankment was to be constructed on a portion of the basin reserved for research purposes. This would also provide experience with the foundation of the dike, consisting of deposits of fine-grained tailings ranging in thickness to 25 meters.

It was originally planned to use waste rock from the mine in the blanket drain, as this would put some of the abundant waste rock to good use, and the resulting drain would have excellent permeability. However, it was determined that this would

require several layers of intermediate materials, and the total thickness required would be too great. At this point, the possible use of a "filter fabric" began to be attractive.

To intercept the anticipated horizontal seepage through the stratified foundation tailings, a vertical cut-off drain was to be tied in to the blanket drain (Fig. 2). Fabric would be placed completely around the rock to prevent the tailings from moving into and clogging the drain.

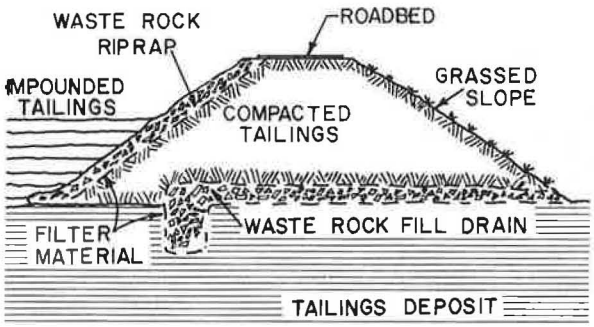

Fig. 2 Preliminary Concept of Coarse Rock Blanket Drain Protected by Filter Fabric.

To investigate the potential for using geotextiles, the available materials and their characteristics were reviewed and textile selection criteria were developed (7). Preventing the migration of fines was of key importance because little experience had been reported in the literature with soils as fine-grained as these tailings. With these considerations in mind, an equivalent opening size test was developed (7). The tailings were washed through a piece of fabric clamped between two parts

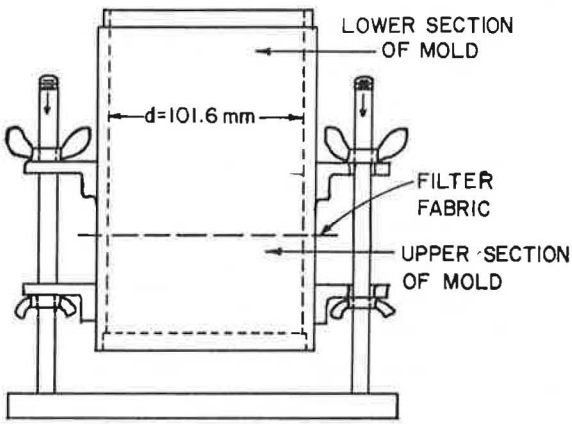

STANDARD $\frac{1}{30}$ CU. FT. COMPACTION MOLD

(REARRANGED)

Fig. 3 Equipment for Improvised Equivalent Opening Size Test.

of a compaction mold and the percent passing determined (Fig. 3). Any tendency for the tailings to excessively abrade the fabric was evaluated on a visual basis.

Using this as a first screening test, the possible field of candidate fabrics was narrowed to four which were then subjected to additional testing. This test involved the use of a permeameter-like device, with the fabric holding a compacted sample of tailings in place while water flowed downward through the sample under constant head conditions (Fig. 4). In addition to evaluating the permeability of the system, this permitted a

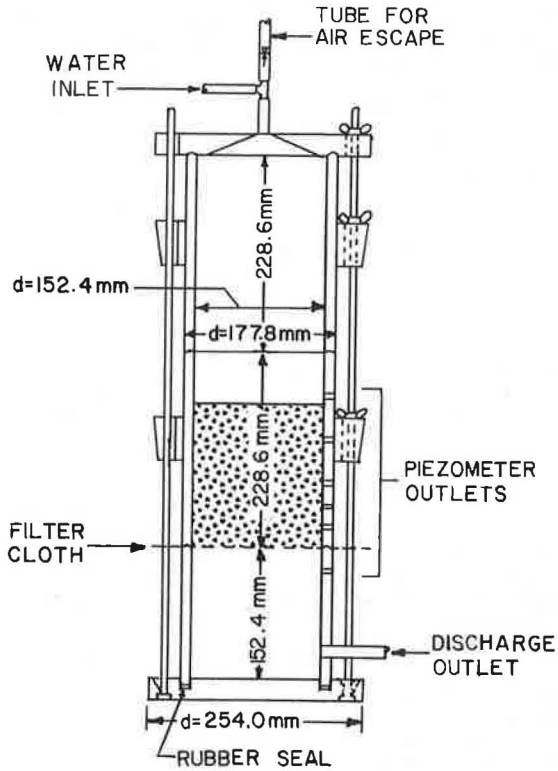

Fig. 4 Permeameter-Type Devise for Determining Loss of Tailings Through Fabric

visual check of whether any tailings were passing through the fabric (7).

This part of the study concluded that either "A" or "C" would be suitable, with "A" apparently having a slight edge. Table 1 summarizes the results of the two stages in the selection process, showing how the original seven candidates were reduced to four by the EOS test and other considerations, these four being further narrowed down to two.

MODIFIED DESIGN SELECTED

Because of economic conditions and mine operating considerations, the construction of the dike was delayed for three years following the study on fabrics. In the interim, foundation studies were

Table 1. Fabric Test Results and Selection Decisions

Fabric	Type	Equivalent Opening Size Test			First Stage Decision	Permeability Test	
		% Soil passing	EOS mm	Equivalent US sieve		Soil Passing	Suitable?
A	non-woven	77.2	0.09	200	test further	negligible	Yes
B	non-woven	90.1	0.12	120	eliminated (a)*	---	(No)
C	non-woven	91.3	0.12	120	test further	very little	Yes
D	non-woven	97.3	0.15	100	test further	considerable	No (d)
E	woven	97.7	0.15	100	eliminated (b)	---	(No)
F	woven	98.7	0.16	100	test further	excessive	(No) (e)
G	woven	99.7	--	---	eliminated (c)	---	(No)

* NOTES: (a) high cost (b) apparent low strength and durability (c) functionally ineffective (d) stretched excessively (e) functionally ineffective

conducted with dynamic and quasi-static cone penetrometers, and the proposed alinement of the dike was shifted to adapt to changed operating conditions. Cone penetrometer studies on the new alinement showed a relatively stiff dry layer of tailings overlying a softer deposit. This crust was about 3 meters thick on the south end of the proposed dike axis, and gradually thinned to about 1.5 meters at the north end. It was thought that the weight of the dike and the eventual filling behind the dike would result in excessive settlement or instability due to the presence of this softer layer at depth.

To simplify construction, it was decided to eliminate the key or trench drain feature of the original cross-section design. Two drain designs would be used. One would be a simple blanket drain about 1 meter in thickness, while the other would have a raised portion near the upstream face. This raised portion would provide better drainage for the tailings to be placed behind the dike (Fig. 5).

As the time for construction drew near, concern developed about possible construction difficulties, especially in the vicinity of a low spot about 100 meters across where water had ponded. There was some difficulty draining it before construction began. Therefore it was decided to use a high-modulus woven fabric, which had not been available at the time of the lab evaluation, in addition to fabric "A". Thus the project would be divided into four sections, one representing each of the four possible combinations of cross-section and fabric (Fig. 5).

CONSTRUCTION PROCEDURES

The construction sequence was to place the lower fabric, then place the sand over it in a 0.5 meter lift. Following that, the sand was brought up to full height, then the second layer of fabric was placed. With the upper fabric layer in place, the cross-section was completed with the coarsest available tailings.

Construction began on the south end, nearest the source of the sand borrow. The slope stakes provided a guide for placing the fabric, which was rolled out perpendicular to the dam axis, with approximately 0.4 meter overlap. It was decided to run the fabric across the dike rather than parallel, as the most likely movement would be a spreading in the transverse direction.

The work generally proceeded well, in spite of often windy conditions. The two men who rolled out the fabric were able to anchor the fabric by hand shoveling sand to tie down the edges, and still manage to lay down the fabric rapidly enough to keep ahead of the scrapers bringing in the sand.

The contractor was reluctant to have the scrapers run off the end of the fill and over the bare fabric, so the scrapers dumped their loads and let a dozer push the sand ahead to cover the fabric. To avoid excessive backing and loss of time, the scrapers were driven off the side of the fill so that they could return to the borrow pit by running over the tailings surface. This generally worked well until excessive rutting was noted at one point, and the non-woven fabric being used there failed in tension over the pressure ridge formed between the two wheel tracks (Fig. 5). Fortunately there was no evidence of failure under the body of the fill; also, the scheduled change from non-woven to woven fabric occurred just a few meters away.

The reason for the difficulty in this area was that water had ponded there during the spring and early summer, and had not drained or evaporated. It was drained by a ditching operation only a few weeks before construction began, and thus was still wet. Changing to the high-modulus fabric permitted the construction to proceed, although it was also necessary to increase the lift thickness to successfully get across this spot.

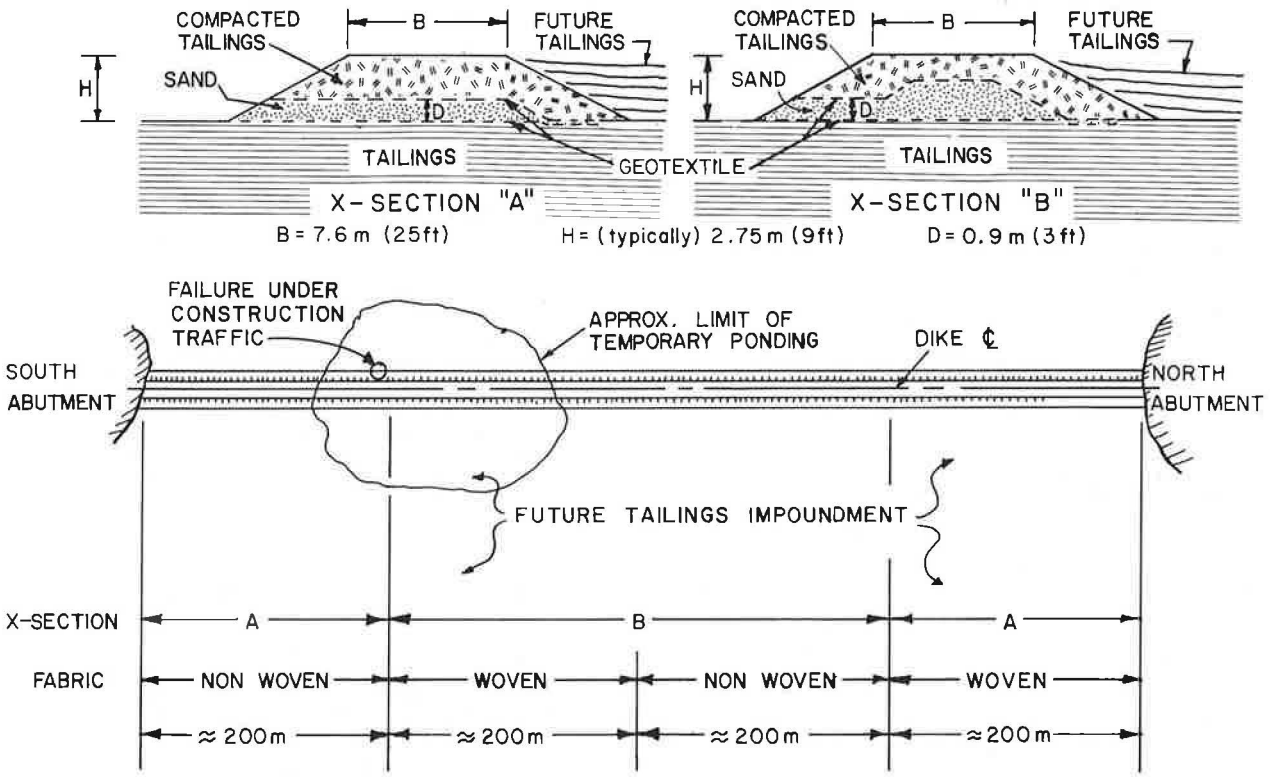

Fig. 5 Typical Cross-Sections and General Plan of Experimental Tailings Dike

With further experience, the contractor found that he could run the scrapers off the end of the fill across the bare fabric if the machines moved slowly and steadily. There were no further difficulties with bearing capacity, although when it was later necessary to build a side ramp for the scrapers to turn off from the dike, fabric was used to insure that there would be no difficulty.

When the sand for the drain had been placed, the second layer of fabric was placed over it, with the fabric overlapping the first layer at the toe of the slope. The dike was then brought up to grade with tailings with no unusual difficulty. A layer of gravel was placed on the top of the dike to carry truck traffic, and rip-rap was placed on the slopes.

OBSERVATIONS AND CONCLUSIONS

The deep-seated instability by a rotational or sliding block movement that was considered a possibility did not, in fact, occur. There was no apparent buildup of pore pressure due to the load of the embankment. The peizometers did not show any change in pore pressure after the dike was placed.

There has been no opportunity to observe the ultimate behavior of the project, as economic conditions caused a delay in the filling behind the dike.

Both fabrics were easy to handle, in spite of some fairly strong winds. This is important in application to tailings basins, as they are often subject to high winds because of their exposure. Laying down a minimum amount of fabric in advance of covering with fill reduces the chance for difficulties due to sudden gusts of wind.

When heavy earthmoving equipment is used, variations in the trafficability of the top meter or so of the foundation tailings may be significant to the success of the placement of the first lift of fill. To continue successfully with construction, it may be necessary to change the thickness of a layer, as was done in the case described, thus changing the cross-section as designed. If such a design change due to field conditions is unacceptable, other alternatives should be readily available. One alternative would be to use lighter equipment. This probably would have worked in the case cited. Another possibility is to have alternate fabrics on hand on the jobsite, so that localized difficult spots can be readily dealt with. While intensive sampling or surface testing, say with a cone penetrometer, would help anticipate these spots, careful observation of the machinery and its effects on the ground can be very effective in locating difficult spots in advance.

Careful study of the tailings to be protected, along with consideration of the true function of the fabric, is necessary. In the case reported here, it was possible to use tailings in the embankment which were somewhat coarser than originally planned for. This would mean that a larger EOS might have been acceptable.

FABRIC SELECTION FOR USE ON TAILINGS: A CHECK LIST

Based on experience with the project cited above, a check list for fabric selection is presented. It is not claimed that this list is all-inclusive, but it should be useful to those contemplating tailings dike construction with fabrics.

1. What is the function of the fabric? What objective is to be realized?
   A. Separation, such as keeping the tailings out of the permeable drainage layer.
   B. Facilitate construction traffic.
   C. Direct drainage, that is the textile itself is the prime drainage agent, as by wick action.
   D. Other.
   RESULT: This should help to establish the general type of fabric desired.

2. What is the range of gradation of the tailings?
   A. Relatively consistent.
   B. Stratified.
   C. Systematic change in gradation, as for example, from coarse at the point of discharge to very fine at the pond.
   RESULT: Indication of the required EOS.

3. What materials are available for the drainage layers, traffic layers, etc., and what are the pertinent characteristics of these materials?
   A. Coarse, angular, sharp particles, such as mine stripping rock, would be potentially damaging to the fabric.
   B. Pit run sand and gravel would tend to be more friendly to the fabric.
   RESULT: Relative importance of tear strength and modulus as they affect construction survivability.

4. What equipment and construction methods will probably be used?
   A. Heavy earthmoving equipment will result in greater tensile stresses in the fabric.
   B. Heavy equipment combined with sharp angular large particles would increase the tendency to tear the fabric.
   RESULT: Further definition of strength and other survivability properties required of the fabric.

5. What are likely to be the conditions at the time of construction? Are they likely to change on a seasonal basis?
   A. Extremely windy.
   B. Extremely wet.
   RESULT: In windy conditions, small rolls of fabric may minimize the problems of the fabric being blown away. If conditions are so wet that the fabric must be handled mostly by manpower, smaller rolls will be better.

6. What is the probability that unexpected conditions will appear during construction?
   A. Exceptionally wet or weak foundation.
   B. Would critical locations control the entire design, or should special designs be developed, perhaps using fabrics specially selected for these conditions?
   RESULT: A decision would be made whether to develop alternate designs, and if so, to be sure the necessary materials were available if and when needed.

REFERENCES

(1) Anderson, Richard O., "Instrumentation and Construction of a Mill Tailings Dam," Unpublished Masters Thesis, Michigan Technological University, 1972.

(2) Arnoldt, Roy O., "Development of Pore Water Pressure in a Fine Grained Iron Ore Tailings Sample," Unpublished Masters Thesis, Michigan Technological University, 1970.

(3) Brawner, C. O. and D. B. Campbell, "The Tailing Structure and Its Characteristics--a Soils Engineer's Viewpoint," in Tailings Disposal Today, Miller Freeman Publishers, 1973.

(4) Department of Energy, Mines and Resources, Tentative Design Guide for Mine Waste Embankments in Canada, Mines Branch Mining Research Centre, Ottawa, Canada, March 1972.

(5) Dingeldein, John E., "Separation Criteria for Hydraulic Construction of a Tailings Embankment," Unpublished Masters Thesis, Michigan Technological University, 1978.

(6) Haas, W. M., "Planning Tailings Retention Basins for Subsequent Land Use," Proceedings of the Fifth Mineral Waste Utilization Symposium, U.S.B.M. and IITRI, Chicago, pp. 75-85, 1976.

(7) Hall, Kenneth T., "The Suitability of Filter Fabrics as a Replacement for Graded Aggregate Filters in Iron Mining Mill Tailings Embankments," Unpublished Masters Thesis, Michigan Technological University, 1976.

(8) Kealy, C. D. and R. L. Soderberg, "Design of Dams for Mill Tailings," Bureau of Mines Information Circular, IC 8410, 1969.

(9) Kubo, Hiroshi, The Effect of Freezing and Thawing on Soil Structure and Shearing Strength," Unpublished Masters Thesis, Michigan Technological University, 1970.

(10) Pawloski, Anthony R., "An Investigation of the Stability of a Mine Tailings Embankment," Unpublished Masters Thesis, Michigan Technological University, 1979.