Earth Reinforcement Practice, Ochiai, Hayashi & Otani (eds) © 1992 Balkema, Rotterdam. ISBN 90 5410 093 1

Parametric analyses of soil nailing stabilized excavation walls

E. De Bernardi
Studio Geotecnico Italiano, Milano, Italy

V.N. Ghionna
University of Pavia, Italy

D. Peila
Politecnico di Torino, Italy

ABSTRACT: Parametric studies of soil nailing stabilized excavation walls have been performed using PROSPER Code.
Numerical analyses involved consideration of different soil types, heights and slopes of walls, lenghts, diameters, spacings and inclinations of the nails.
In overall more than 400 cases have been analysed.
The results have been reported in form of plots useful for preliminary design.

1 INTRODUCTION

Soil nailing is a versatile soil reinforcement technique widely used in several countries (i.e. France, Germany, Usa, Japan, U.K., etc.) to stabilize excavation walls and slopes (Bruce and Jewell [1986, 1987]; Schlosser and Juran [1991]; Gassler [1990]; Schlosser et al. [1992].
Parametric studies have been carried out, for soil nailing supported excavation walls by Bangratz and Gigan [1984]; Gigan [1986]; Long et al. [1990]; Gudehus [1981]; Gassler and Gudehus [1983]; Juran et al. [1990].
Such analyses involved a large variety of design methods and different normalization criteria (Bangratz and Gigan [1981]; Gudehus [1981]; Bruce and Jewell [1987]; Juran and Elias [1990]).
However, the technique involves so many parameters that it is very difficult to meet the requirement of an absolute generality.
On the other hand the availability of simple approaches for an easy pre-dimensioning and cost evaluation is of great interest in the field of practical applications and also for the development of the technique. This justifies the need for further parametric studies in order to enlarge the capability of such approaches.
The analyses reported in the following were carried out with the aim of investigating the performance of bars commonly used in Italy for traditional construction works.
Since such bars are of poorer quality, with respect to those usually adopted in soil nailing practice, this aspect should be taken into account when evaluating the results obtained.
Calculations were performed using the computer code PROSPER set up at LCPC (Delmas et al. [1986]).
This code was choosen because of its relative simplicity while, at the same time, taking the most important aspects of the soil-nail interaction phenomena into account.

2 PROSPER CODE

A detailed description of the Code is reported in Delmas et al. [1986]; LCPC [1989].
Only the main features strictly related to the performed analyses have here been given.
The code evaluates the global and local stability of the reinforced soil mass: the first concerns the sliding portion of the soil mass while the second refers to the bars (fig. 1).
The global stability is assessed using a modified slope stability slice method (perturbation method, Raulin et al. [1974]) and taking into account the shearing, bending and pull-out resistance of the inclusions.
A global safety factor (fsg) is so defined and its value has been assumed equal to 1.3 according to Italian rules for artificial slopes.
The local stability of the nails is evaluated with respect to the following fundamental mechanisms:

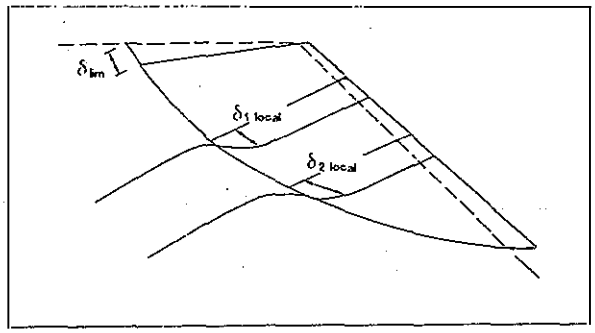

Fig. 1 Soil displacement (δ) along failure surface

a) nail pull-out resistance
b) lateral passive earth resistance
c) structural resistance of the bars.

The following safety factors are respectively defined (LCPC [1989]):

a) safety factor against pull-out (f_a):

$$f_a = \frac{q_s \cdot L_p \cdot L_a}{N}$$

where:

q_s : soil-bar limit skin friction (see fig. 2a)
L_p : nail perimeter
L_a : anchorage length of the nail
N : maximum tensile force in the nail.

In the present study, values of $f_a \geq 2$ have been assumed;

b) safety factor against passive lateral earth pressure (f_p): $f_p = p_f/p$

where:

p_f : lateral passive pressure of the soil ("fluage") (see fig. 2b)
p : maximum lateral earth pressure induced by the nails in the soil.

Values of $f_p \geq 2$ have been considered in the calculations ; values $f_p \leq 2$ have also been permitted but only on a limited portion of the bar (≤ 0.5 m).

c) Safety factors against structural yielding:

c.1) yielding due to normal stresses induced by tensile force (N) and bending moment (M): $f_{bi} = \sigma_e/\sigma$

where:

σ_e : material strength ("elastic threshold")
σ : normal stress in the bar, conventionally evaluated in the section where the bending moment (M) is maximum;

c.2) yielding due to normal and shear stresses induced by tensile force (N) and shear force (T): $f_{b2} = \sigma_e/\sigma_{id}$

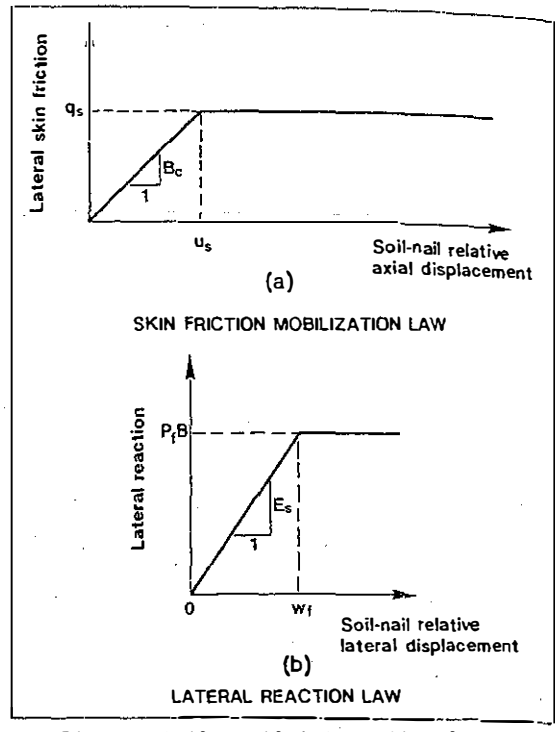

Fig. 2 Soil- nail interaction laws

where:

σ_{id} : equivalent ("ideal") normal stress evaluated in the section where the tensile (T) is maximum, by means of the Tresca criterion.

Values of f_{b1} and $f_{b2} \geq 1.7$ have been assumed in the calculations.

3 NUMERICAL ANALYSES

3.1 Excavation walls

The analyses have been carried out by excavation walls of different heights (H) and slope angles (δ) into account (fig. 3).
Only cases with horizontal ground level have been considered.
Furthermore no vertical surcharge or other external forces have been introduced.

3.2 Reinforcement

Soil reinforcement consists of steel bars grouted into pre-drilled boreholes. Only one pre-drilled bar diameter ($2r_o$) and one borehole diameter (B) have been taken into account. All bars are made of the same type of steel.
Nails have been assumed to be equally spaced both in the vertical and horizontal directions (spacings $i_h = i_v = i$).

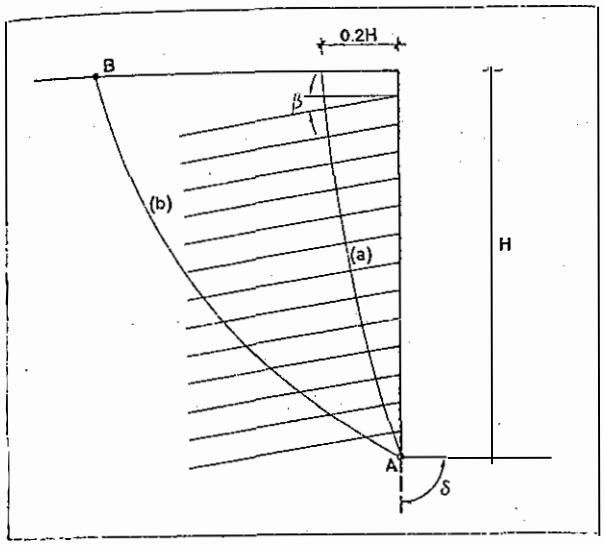

Fig. 3 General scheme of the standard geometry

All bars have the same length (L) and inclination (β) on the horizontal plane. Different inclination angles have been considered in the calculations, while the lengths were the result of the analyses. Another parameter defining the geometry of the reinforcement which has been taken into account is the distance of the first bar from the top (d_t) (or the bottom d_b). The influence of this parameter has been studied by varying the position of the set of bars and leaving unchanged all other parameters.

3.3 Soil

Soil was assumed to be uniform and homogeneous and predominantly granular (from silty to gravelly medium dense sand). Three types of soil were considered, characterized by three sets of values for the angle of shearing resitance (ϕ'), the Young modulus (E') and the unit gravity mass (γ). The cohesion intercept (c') was always assumed to be equal to zero. Finally, water table was considered to be absent.

3.4 Parametric analyses

More than 400 cases have been analysed by taking into account the following parameter combinations:

a) reinforcement

$\delta = 90°$ and $\beta = 0°; 5°; 10°$

$\delta = 70°$ and $\beta = 0°; 10°; 20°$

$H = 6; 7.5; 9; 10.5; 12$ m (in some analyses intermediate values of H were also considered)

$i = 0.75; 1; 1.5$ m

$d_t = d_b = 0.5$ m ÷ 0.85 m

b) nails

$B = 0.08$ m

$2r_o = 0.03$ m

steel: Feb 38 K

$\sigma_e = 380$ MPa

$E = 260.000$ MPa

c) soil

Table 1 Profiles of three types of soil

Soil type	ϕ' (°)	γ (kN/m)	E' (MPa)	C' (kPa)	p_l (kPa)	α (-)	q_s (kPa)
a	40	22	80	0	2000	1/4	200
b	35	18	30	0	750	1/3	750
c	30	18	15	0	700	1/2	80

where:

p_l : pressuremeter limit pressure

α : coefficient for lateral soil-pile reaction modulus evaluation

q_s and p_l were evaluated according to Bustamante and Doix [1985], while α was assumed from Frank [1984]. The reaction coefficients B_c and E_s were evaluated using the following expressions (Frank [1984]; Frank and Zhao [1982]):

$$E_s = \frac{18\,E_m}{4 \cdot (2.65)^{\alpha} + 3\,\alpha}$$

$$B_c = E_m / 3r_o$$

being:

E_m : pressuremeter modulus; approximately $E_m \approx 1.4 \cdot E'$

For each case, the analyses were carried out by taking 10 sliding surfaces ranging between the two extremes, as shown in fig. 3, into account.
The shape of the surfaces was choosen in agreement with the experimental evidence. Position of surface (b) corresponds to a global safety factor very close to 1 on unreinforced soil.

4 RESULTS

The results obtained are shown in figs. 4 to 7. Fig. 4 reports the influence of the

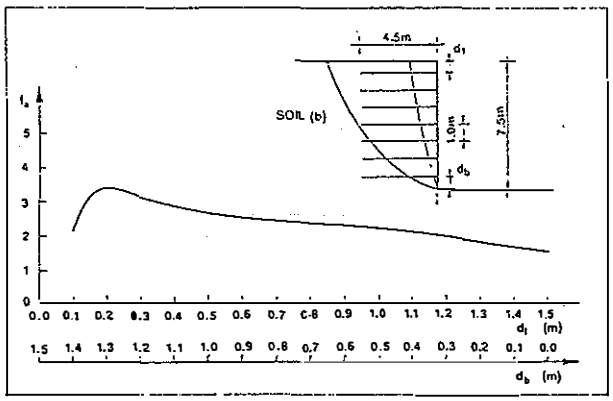

Fig. 4 Influence of the position of the set of bars on safety factor

position of the bars set along the wall as obtained in one of the considered cases. This influence is expressed in terms of safety factor f_a vs. the distance d_t (or d_b) from the top (or the bottom) of the excavation. As can be seen there is a marked influence, with a significant variability around the admissible value $f_a = 2$.

This evidence poses the need for a precise definition of such a position in parametric analyses. In the present study, as previously reported, has been assumed for simplicity: $d_t = d_s = 0.5$ m to 0.85 m.

Figs. 5a and 5b show that a direct, approximately linear, relationship exists between the wall height (H) and bar length (L). This relationship depends primarily on the type of the soil and spacing (i); the slope of the wall (δ) and the inclination of the bars (β) have less influence.

Figs. 5a and 5b also show that, with the adopted bars the largest spacings cannot be reached in all conditions; for example, in the case of fig. 5, i = 1.5 m is allowed for δ = 70° but not for δ = 90°. However, by improving the quality of the steel, such spacing also became possible for δ = 90° (fig. 5a).

Figs. 6a to 6f summarize obtained results. The plots of these figures report the normalized parameter L/i^2 vs H and can be used for a preliminary design.

In the range of the considered heights of the walls (H = 4 to 12 m), data can be interpolated by an approximately linear regression.

The case of vertical walls (δ = 90°) with soil (b) has been studied in more detail because it was believed to correspond to the most frequent situation encountered in practice.

In previously cited studies it was proposed to use some normalized parameters to represent the overall behaviour of the reinforced walls.

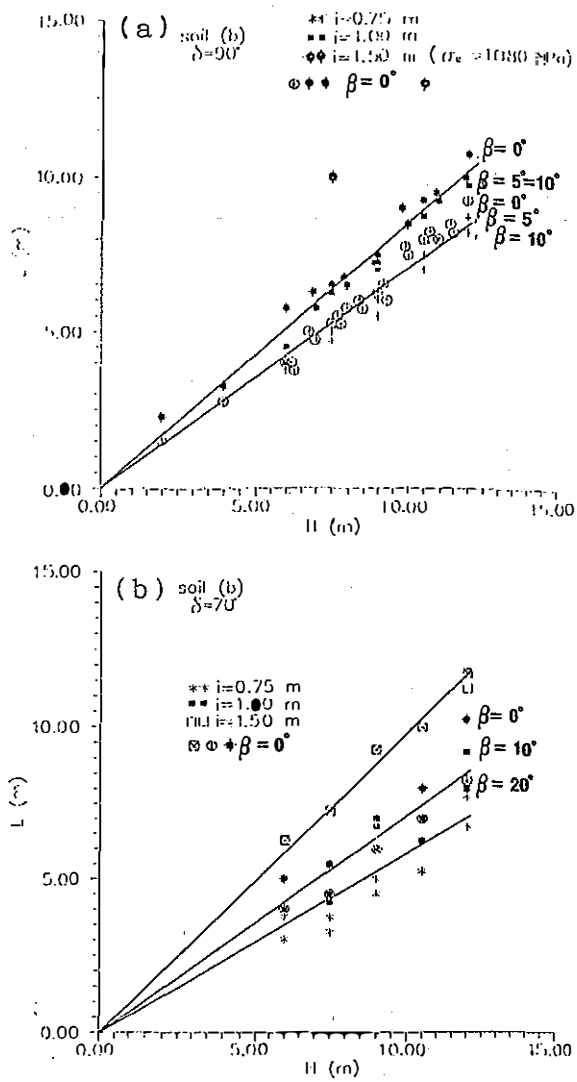

Fig. 5 Nails length (L) vs. height of the wall (H)

Tab. 2 refers to parameters reported in Bruce and Jewell [1987] based on case histories.

A comparison is shown with those obtained in the present study.

Calculated values are in general a little higher than experimental values. This is due to the commercial type of bars assumed in the calculations which are of poorer quality with respect to those usually adopted in soil nailing practice.

A parameter which is representative of the overall behaviour of the reinforced wall is the global value of the tensile forces in all bars (T_n).

Such a value can be compared with the force required in traditional stabilizing methods (i.e. anchors method) to obtain the same global safety factor.

This has been done by evaluating the stabilizing force (T_j) by means of the

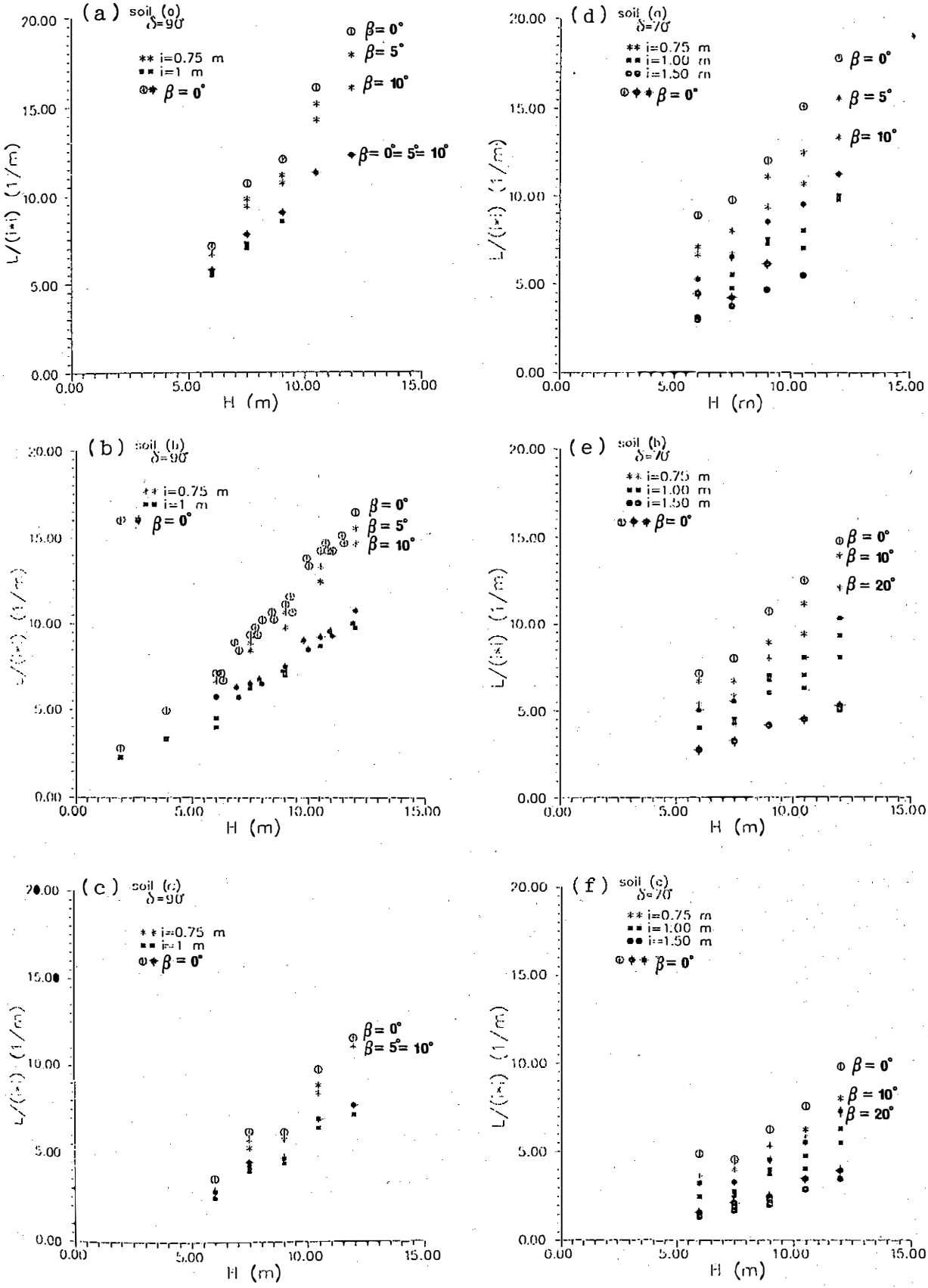

Fig. 6 Normalized parameter (L/i^2) vs. height of the wall (H)

Table 2 Representative parameters (Bruce and Jewell [1987])

Parameter	Real cases	Calculated
H/L	0.5 to 0.3	0.56 to 0.91
$B \cdot \bar{L}/i^2$	0.3 to 0.6	0.5 to 1.24
$(2\tau o/i)^2$	$(0.4 \text{ to } 0.8)10^{-3}$	$(0.9 \text{ to } 1.6)10^{-3}$

simplified Janbu method [1973] for slope stability analyses.
The ratio T_n/T_j is approximately independent of geometry, type of soil, etc. and ranges between 0.7 to 0.9.

5 CONCLUSIONS

The present study deals with the parametric analyses of soil nailing stabilized excavation walls.
The numerical analyses involved the consideration of different soil types, heights and slopes of walls, lengths, diameter spacings and the inclinations of the bars. More than 400 cases were taken into account.
The analyses were carried out using the code Prosper set up at LCPC (Delmas et al. [1986].
The results were presented in the form of plots allowing a simple use for practical purposes.
Since a commercial type of steel bar of poorer quality with respect to those usually adopted in soil nailing practice was considered, the results should be considered to some extent conservative.

REFERENCES

Bangratz J.L., Gigan J.P. 1984. Méthode Rapide de Calcul des Massifs Cloués. Colloque Intern. Renforcement en Place des Sols et des Roches. Ecole Nationale des Ponts et Chaussées, Paris.

Bruce D.A. Jewell R.A. 1986. Soil Nailing: Application and Practice - Part 1. Ground Engineering.

Bruce D.A., Jewell R.A. 1987. Soil Nailing: Application and Practice - Part 2. Ground Engineering.

Bustamante M. and Doix B 1985. Une Méthode pour le Calcul des Tirants et des Micropieux Injectés. Bull. Liaison Labo. P. et Ch. 140.

Delmas Ph., Berché J.C., Cartier G. and Abdelhed A. 1986. Une Nouvelle Méthode de Dimensionnement du Clouage des Pentes: Programme Prosper. Bullettin de Liaison du Laboratoire des Ponts et Chaussées. Vol. 141.

Frank R. 1984. Etude Théorique de fondations profondes et d'essais en place par autoforage dans les LPC et résults pratiques (1972-1983). Rapport de recherche LPC n° 128 - Laboratoire Central des Ponts et Chausées, Paris.

Frank R. and Zhao S.R. 1982. Estimation par le parametres pressiometriques de l'enforcement sous charge axiale de pieux forés dans des sols fins. Bull. Liaison Labo. P. et Ch. 119.

Gassler G., Gudehus G. 1983. Soil Nailing: Statistical Design. Proc. 8th European Conf. Soil Mech. and Found. Engineering. Helsinki.

Gassler G. 1990. In-Situ Techniques of Reinforced Soil. Proc. COnf. Performance of Reinforced Soil Structures Glasgow. British Geot. Society.

Gigan J.P. 1986. Applications du Clouage en Soutenement. Paramétres de Conception et de Dimensionnement des Ouvrages. Bulletin Liaison Laboratoire des Ponts et Chaussées n° 143.

Janbu N. 1973. Slope Stability Computations. Embankment Dam Engineering. Ed. Hirschfeld; John Wiley and Sons.

Juran I., Branband G., Farrag K., Elias V. 1990. Kinematical Limit Analysis for Design of Soil Nailed Structures. Journ. Geot. Engineering ASCE - Vol. 116 n° 1.

Juran I., Elias V. 1990. Behaviour and Working Stress Design of Soil Nailed Retaining Structures. Glasgow. British Geot. Society.

Long J.H., Sieczkowski W.F. Chow E. and Cording E.J. 1990. Stability Analysis for Soil Nailed Walls. Proc. Conf. Design and Performance of Earth Retaining Structures Ithaca. ASCE - Geot. Eng. Division.

LCPC 1989. Logiciel Prosper-89. Notice d'Utilization.

Raulin P., Rouquès G., Toubol A. 1974. Calcul de la Stabilité des Pontes en Rupture Non-Circulaire. Laboratoire Central des Ponts et Chaussées Paris.

Schlosser F., Unterreiner P. and Plumelle C. 1992. French Research Program Clouterre on Soil Nailing. Proc. Conf. Grouting, Soil Improvement and Geosynthetics. New Orleans. ASCE - Geot. Eng. Division.