Earth Reinforcement Practice, Ochiai, Hayashi & Otani (eds) © 1992 Balkema, Rotterdam. ISBN 90 5410 093 1

Permanent cut of an embankment slope by soil nailing allowing very small deformation

M.Tateyama & H.Tarumi
Railway Technical Research Institute, Kokubunji, Japan

Y.Tamura
Tokyu Construction Co., Ltd, Japan

F.Tatsuoka
Institute of Industrial Science, University of Tokyo, Japan

ABSTRACT: A gentle slope of railway embankment made of cohesionless soil was excavated to a near-vertical permanent wall, 4-7m high and 300m long, by soil nailing. To allow only very small deformation of slope, before the excavation of slope, a row of treated soli columns was made by an in-situ mixing method using cement mortar from near the crest of slope, and a lightly steel-reinforced cast-in-place concrete slab was placed on the excavated slope surface. A field full-scale model test was also performed.

1 INTRODUCTION

The method of excavating a gentle slope or level ground to create a near-vertical slope by means of steel-reinforcing is called Soil **Nailing** (e.g., Gassler, 1990). So far, this technology has been used mostly for weathered rocks or very stiff cohesionless soils. On the other hand, in urban areas in Japan, for the grade separation of railway, an extensive length of embankment was constructed in the past, which had a relatively gentle slope, typically 1:1.5- 1.8 in vertical to horizontal, occupying a relatively wide area. Recently, in some heavily populated urban areas, in order to create new free space next to existing railway embankments, the feasibility of cutting their gentle slopes to near--vertical walls has been seeked. Some additional measures should be taken to the conventional soil nailing, however, to overcome the following two difficulties: 1. Most railway embankments were made by compacting uncemented soil, which is, therefore, much weaker and softer than most natural slopes. 2. Only very small deformation of slope is allowed during and after cutting work to ensure the daily safe running of trains.

To this end, a field full-scale model test, laboratory small-scale model tests and numerical analyses were performed. As the first case, a 4-7 high steep wall (1.0:0.4 in V:H) with a total length of 300m was constructed by cutting an existing gentle slope of railway embankment in Osaka (Fig. 1), extremely carefully allowing daily rapid trains to run for one of the busiest lines in Japan, Tokaido Line.

2 OUTLINE OF THE SOIL NAILING METHOD USED

Referring to Fig. 2, the soil nailing method developed consists of the following steps:
(1) From near the crest of the existing slope, a row of treated soil columns is made by an in-situ mixing method. This step may be eliminated if the expected deformation of slope during the subsequent cutting work is small enough.

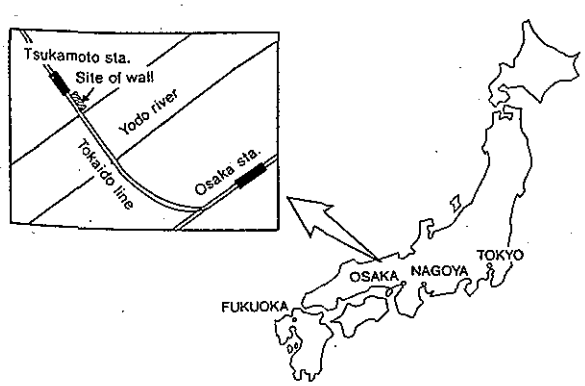

Fig. 1 Tsukamoto Station, Osaka.

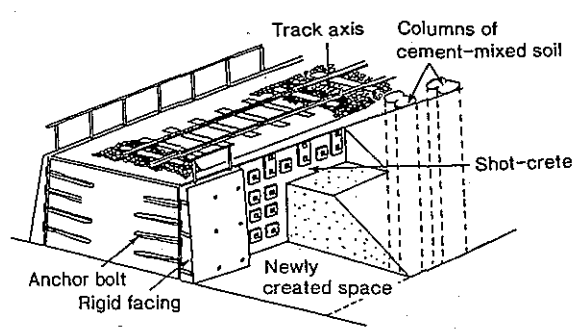

Fig. 2 Soil nailing method developed.

(2) From the top of the slope, an about 1m thick layer of slope is excavated, and then inclined holes are made, inserting deformed steel-bars as tensile-reinforcing members. The small annular space between steel bars and soil is grouted with cement mortar, allowing cement mortar to permeate as much as possible in the interior of embankment.
(3) The excavated slope surface is covered with a skin of provisional shotcrete reinforced with wire mesh. After setting of mortar, a bearing plate of 25cm x 25cm is fixed to the top of steel bar so as to apply some prestress to the reinforcement and confining pressure so as to the slope surface so as to suppress the possible deformation of slope near the slope surface.
(4) The steps (2) and (3) are repeated until the full height of slope is excavated, monitoring the deformation of the slope.
(5) An about 30cm thick lightly steel-reinforced cast-in-place concrete slab is placed on the excavated slope surface.

The use of Steps (1) and (5), additional to the conventional soil nailing to suppress the possible deformation of slope, was based on a finding that when using a continuous rigid facing, both laboratory models and prototypes of geotextile--reinforced soil retaining walls exhibited very small deformation, particularly against concentrated load (Tatsuoka et al., 1989, 1990, 1992, Murata et al., 1991).

3 FIELD FULL-SCALE MODEL TEST

Prior to the actual construction work, a 3m high test embankment having gentle slopes of 1:1.8 in V:H was constructed. A sand having a fines content of 16% and D_{50}= 0.2mm was compacted to a total unit weight of 1.65gf/cm^3. One of the slopes was excavated, being reinforced with deformed steel bar with a diameter of 25mm. At each layer of excavation, slight pre-stress was applied to the top of each steel bar. The excavated slope surface was covered with a cast-in-place unreinforced concrete slab (Fig. 3). The completed wall had a slope of 1:1.8 in V:H (Plate 1). In this test, to reduce the deformation of slope as much as possible, at each step of excavation, steel bars were placed in the slope before excavating each soil layer. Indeed, almost no deformation of the slope was observed during cutting work (the maximum outward horizontal displacement at the crest of slope was 3mm). It was revealed, however, that this method of placing reinforcement be rather impractical, since it needed relatively long reinforcement members, which increased the total boring length and therefore, increased largely the construction duration.

A dynamic vertical load of ±9tonf at a frequency of 20Hz by using an unbalanced weight of 13tonf was applied on the top crest of the embankment, simulating typical major train load. The recorded maximum dynamic vertical displacement at the location of the vibrator (i.e., the location of the assumed railway track) was 3mm in single amplitude, which was much less than the specified allowable maximum displacement of 13mm and the displacement of 30mm leading to possible de-railing of train. Then, the slope was brought to failure by applying static load from the crest by using a 3m in width x 2m footing (Fig. 3 and Plate 1). The footing with a roller slider between the base and the ground surface was loaded using a set of hour hydraulic jacks. The reaction frame was supported with deep-seated four anchors. Same oil pressure was applied to the four jacks. To achieve the plane strain condition, the test section having a width of 3m was separated from the adjacent unloaded sections through a lubrication layer consisting of a two plywood sheets with a grease layer in between. Figs. 4 and 5 show the test results. Considering that the specified design bearing capacity load for the train load is 3tonf/m^2, obviously the slope was sufficiently strong. The facing was trans-

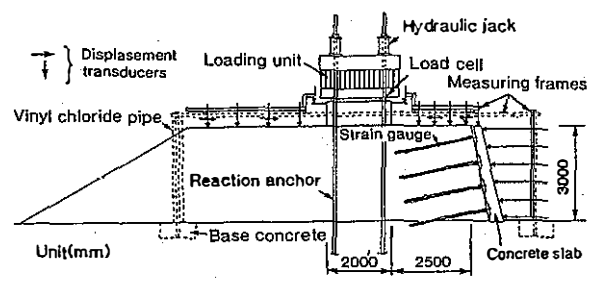

Fig. 3 Test embankment constructed to develop the soil nailing method.

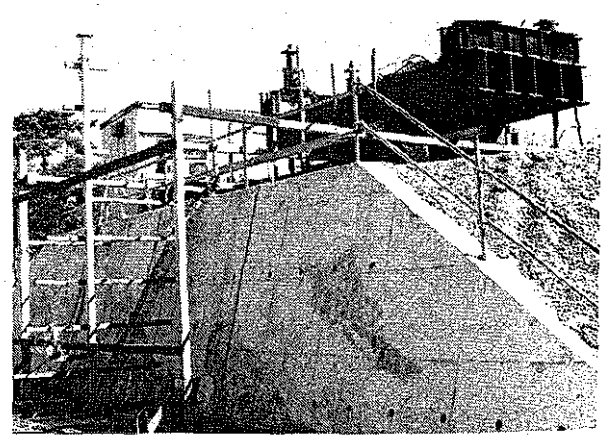

Plate 1 Static loading test on the slope of test embankment, cut by the newyly developed soil nailing method.

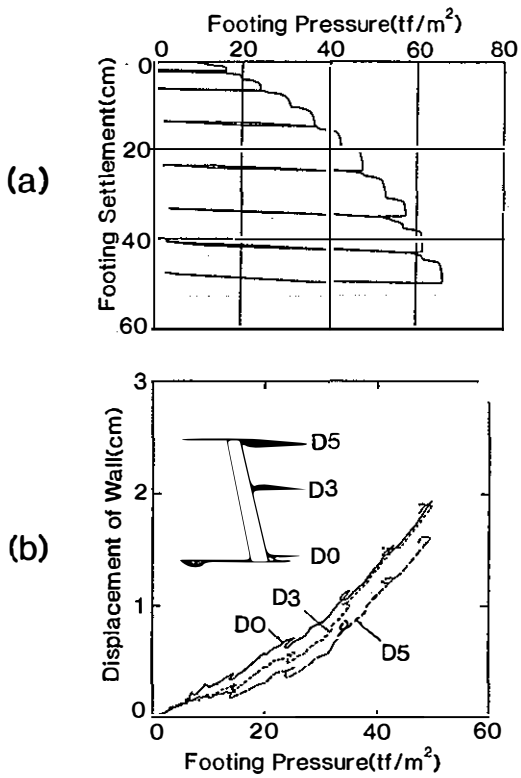

Fig. 4 (a) Average footing pressure versus footing settlement and (b) average footing pressure versus outward displacement at facing from static loading of reinforced test slope.

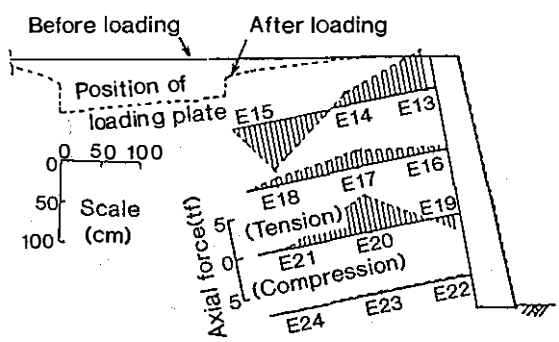

Fig. 5 Location of footing and tensile-force in steel bars at the maximum footing load.

lated for an outward displacement of the order of 20mm without very small rotation (Fig. 4b). The bearing capacity coefficient N_γ was about 40, which is relatively large, compared to the value for a footing of this size located near the crest of steep unreinforced slope. This result shows that the slope was effectively steel-reinforced and stabilized by using a continuous rigid facing.

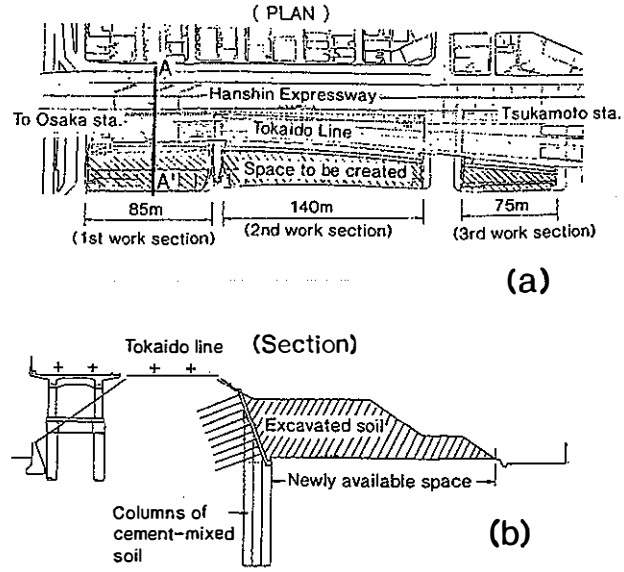

Fig. 6 (a) Plan and (b) cross-section of the cutting work site next to Tsukamoto Station, Osaka.

4 CUTTING WORK AT TSUKAMOTO

The railway embankment adjacent to Tsukamoto Station was constructed about 30 years ago by compacting sand taken from the adjacent Yodo River. In 1990, to remove a large volume of soil of 25,000m^3 (about 4-7 m in height times about 300m in length) from the existing embankment to create a new free area of about 6,300m^2, the slope was cut to a near vertical wall (Figs. 6 and 7, Tateyama et al., 1991).

Since the site is located next to the present river course, the condition of supporting ground is not good (Fig. 7b). First, from near the crest of the existing slope, six columns of cement-mortar treated soil having a diameter of 1m were produced simultaneously down to a depth of 17m from the original ground surface (Plate 2 and Figs. 7 and 8). They were designed so as to; **1.** increase the overall stability of the embankment against the sliding for a failure surface seated in the soft clay deposit underlying the embankment, and 2. suppress the possible deformation of the slope during the subsequent cutting work.

Next, the slope was cut step-by-step in a layer of 0.75m for a length of 20m, monitoring very carefully the displacement of the railway track and the deformation of slope. Immediately after each layer was excavated, a row of deformed steel bars were inserted into the slope by means of rotary-percussion without using a casing at a horizontal spacing of 6m (Fig. 7c and Plate 3). The steel bars were statically

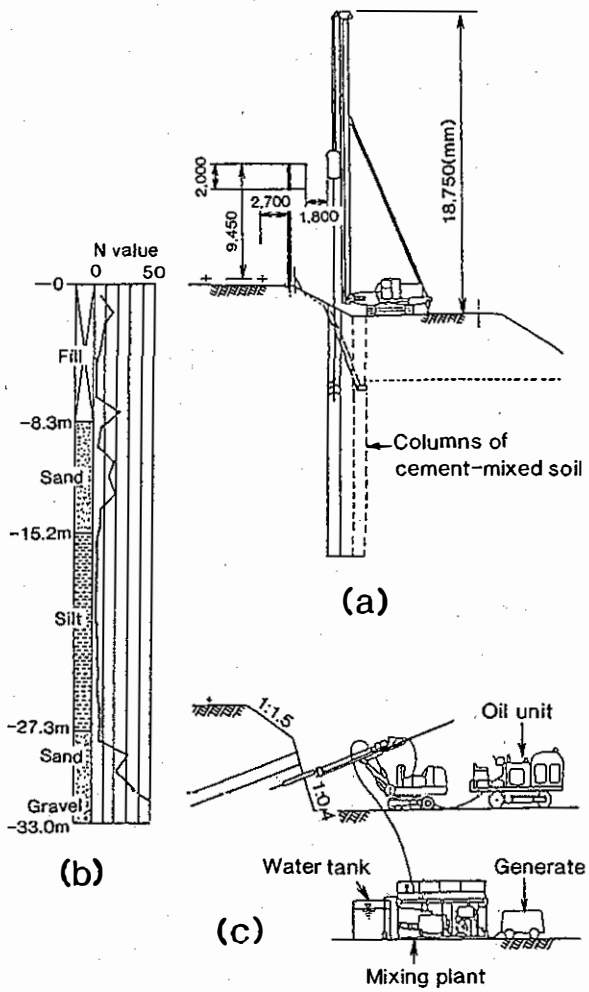

Fig. 7 (a) In-situ mixing method producing treated soil columns, (b) soil condition of the embankment and the supporting ground, and (c) soil nailing method.

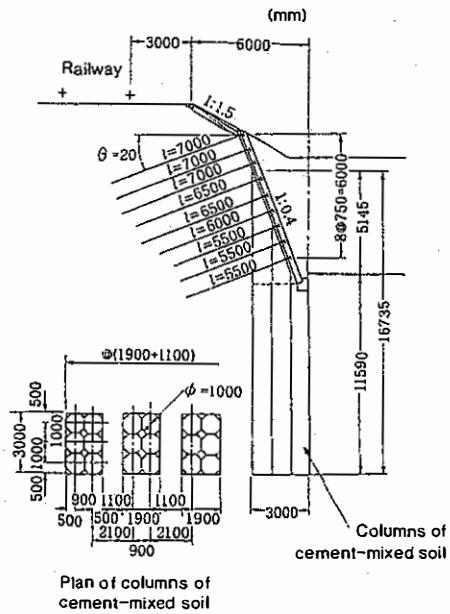

Fig. 8 Details of arrangement of treated soil columns and steel-bar reinforcement.

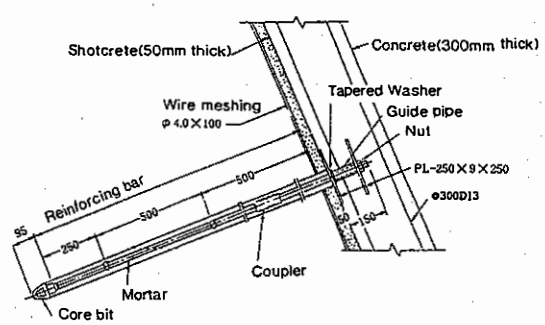

Fig. 9 Details of reinforcing steel bar and its connection with facing.

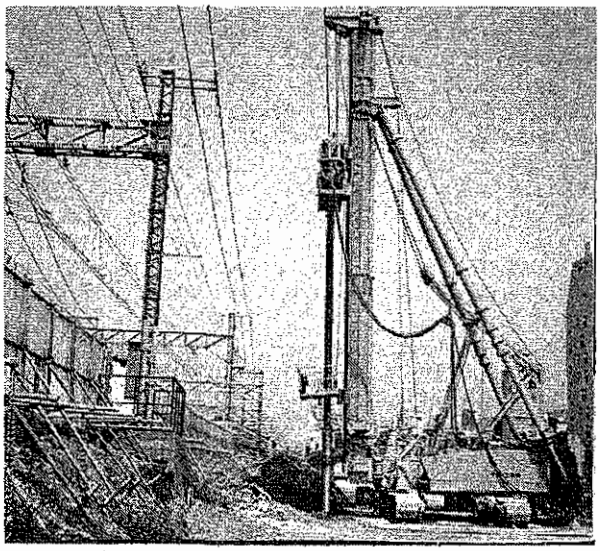

Plate 2 In-situ mixing work from near the crest of slope, Tsukamoto.

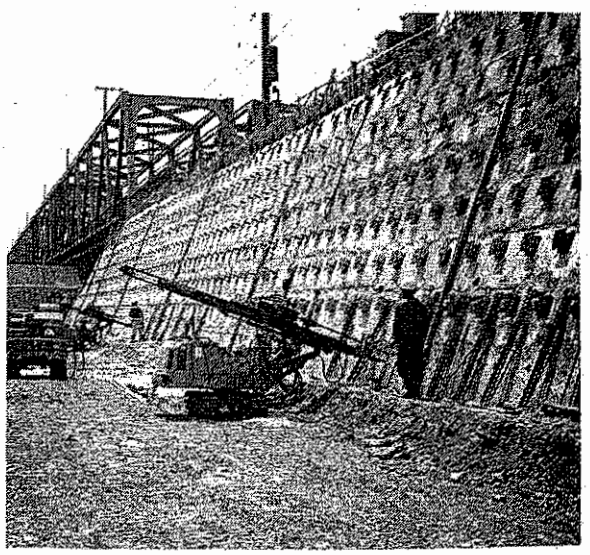

Plate 3 Placement of reinforcement, Tsukamoto.

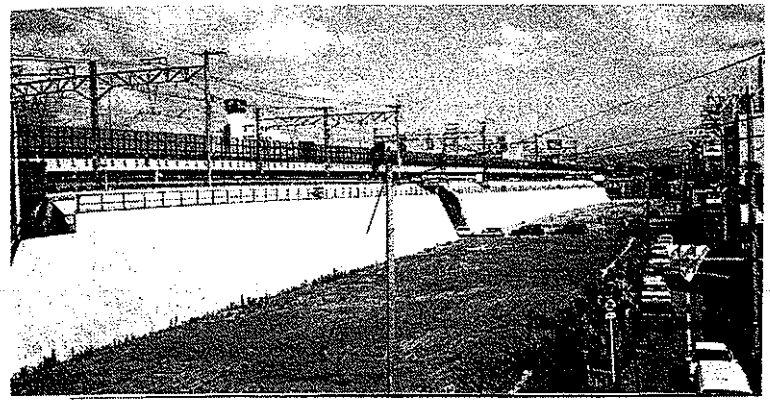

Plate 4 View of completed wall, Tsukamoto.

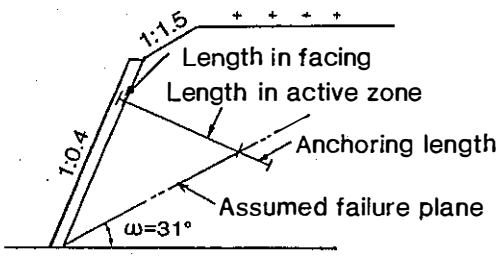

Fig. 10 Stability analysis by the limit equilibrium method.

pushed into the slope when soil was soft enough, while they were dynamically struck when soil was relatively stiff. Each steel bar was a hollow stem with outer and inner diameters of 6cm and 2cm (Fig. 9) to be used not only for boring and reinforcing, but also for grouting with cement mortar from the hollow simultaneously with boring. By this way, the construction period could be reduced substantially. Since grouting from the bored hole into the interior of slope was allowed, it was expected that a relatively thick improved cylindrical grouted zone was formed surrounding each bore hole, which would also help reducing the possibility of the corrosion of steel bars. Immediately after installing reinforcement, a skin of about 5cm-thick shotcrete reinforced with wire mesh was placed on the slope surface. Then, by using a bearing steel platen at the top of the steel bar, a degree of prestress was applied to the slope surface.

The length of steel bar was determined so as to ensure the stability of the reinforced slope as analysed by the limit equilibrium method (Fig. 10). Namely, for each stage of excavation, the critical failure plane for the unreinforced slope was obtained applying a horizontal seismic force of 20% the gravity force to the active zone located outside the critical plane. The Coulomb active earth pressure working for

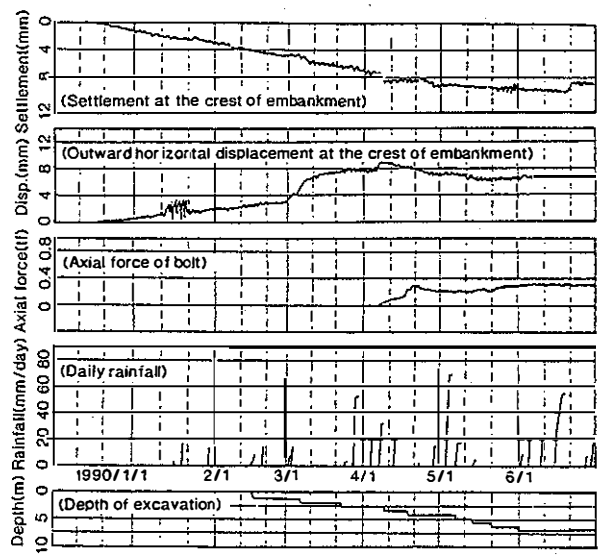

Fig. 11 Time histories of settlement and outward horizontal displacement at the crest of slope, and tensile force in a representative steel bar, daily rainfall and excavated depth (Section **A-A'** in Fig. 6a), Tsukamoto.

each layer of excavation was assumed to be resisted by a row of reinforcement at that layer. The anchor force of the steel bar was the sum of the bond stress, which was assumed equal to the shear strength of soil, for the length deeper than the critical plane. It was confirmed that the anchor force be less than the tensile rupture strength. Because of relatively weak soil of the embankment with the estimated values of $\phi = 30.7°$ and zero cohesion, the reinforcing steel bars became relatively long (Fig. 8).

Vertical drainage was provided on the surface of the excavated slope behind the shotcrete layer. Drainage holes were made through the concrete facing by one per

$4m^2$. Finally, after the full height of the slope was excavated, a 30cm-thick lightly steel-reinforced cast-in-place concrete slab was placed on the slope surface (Plate 4). The total number of treated soil columns was 530, the number of the reinforcement steel bars was 2,700, and the area of cast-in-place concrete slab was $1,700m^2$. It was expected that the concrete slab could not only keep the possible deformation of the wall to a minimum value in the future, but also solve the aesthetic problem associated with the use of shotcrete skin, providing an acceptable appearance.

Fig. 11 shows the recorded time histories of the deformation of the slope. The largest deformation was smaller than the prescribed allowable value, 12mm. The increment of displacement at the crest was largest during cutting the first layer located above the treated soil columns, whereas it became very small during cutting the lower soil layers at the levels where the slope was supported by the treated soil columns. This behavior well indicates the effectiveness of using this type of treated soil columns for suppressing the deformation of slope during cutting work. Note also that the site had been subsiding continuously due to the consolidation of the underlying soft soil layers, as noted from the deformation before the start of cutting work. Indeed, the rate of settlement was even reduced due to unloading associated with the cutting work.

The cutting work was controlled so as to satisfy the following three criteria: **(1)** The observed displacements of the railway track should be smaller than the specified value of the order of 5mm. The inspection should be made three times a day. If measured values be found to have exceeded the specified values, maintenance works should be taken to restore the displacement to be zero. **(2)** The creep rate of the horizontal outward deformation at the crest of slope should be examined every three minutes. If the creep rate exceeds 0.001 for every two minutes, the on-site supervisor should reconfirm this value. If the creep rate exceeds 1.6 times the above, the excavated layer should be re-filled, and the present situation should be informed to the railway maintenance office in charge. In the actual construction, these values were never exceeded. **(3)** The accumulated axial tensile force in reinforcing steel bars should be less than the specified value, which increased as the excavation depth increased. This controlled was achieved by monitoring the horizontal outward displacement at the slope face. The allowable value was obtained by assuming that the allowable tensile force is activated at the center of steel bar and the tensile force decreases linearly to zero at both ends. The observed value became close to the allowable value only when excavating the first layer (Fig. 11), while it never happened when excavating the lower soil layers.

5 CONCLUSIONS

Soil nailing was used to excavate an existing gentle slope of railway embankment made by compacting uncemented soil to a near-vertical wall with extremely small deformation (less than 1cm at the crest of the slope) allowing daily passing of trains as usual. To this end, prior to the cutting work, a row of treated soil columns were made by an in-situ mixing method from near the crest of slope, and finally the excavated slope surface was covered with a thin lightly steel- reinforced cast--in-place concrete slab so that the wall could function satisfactory as a permanent structure exhibiting minimum deformation.

REFERENCES

Gassler,G. 1990: In-situ techniques of reinforced soil, Sate-of-the-Art Report, Performance of Reinforced Soil Structures, Proc. Int. Reinforced Soil Conf., Glasgow, Thomas Telford, pp.185-196.

Murata,O., Tateyama,M, and Tatsuoka,F., Nakamura, K.. and Tamura, Y. 1991. A reinforcing method for earth retaining walls using short reinforcing members and a continuous rigid facing, Proc. ASCE Geotech. Engrg Congress 1991, ASCE, Geotech. Special Publication 27: 935-946.

Tatsuoka,F., Tateyama,M. and Murata,O. 1989. Earth retaining wall with a short geotextile and a rigid facing, Proc. 12th ICSMFE, 2: 1311-1314.

Tatsuoka,F., Murata,O., Tateyama,M., Nakamura,K., Tamura,Y., Ling,H.I., Iwasaki,K. and Yamauchi,H. 1990. Reinforcing steep clay slopes with a non-woven geotextile, Proc. Int. Reinforced Soil Conf., Glasgow: 141-146.

Tatsuoka,F., Murata,O. and Tateyama,M. 1992. Permanent Geosynthetic-Reinforced Soil Retaining Walls Used for Railway Embankments in Japan, Proc. Int. Sympo. on Geosynthetic-Reinforced Soil Retaining Walls, Denver, Balkema.

Tateyama,M., Murata,O., Sugiyama,M. and Sawada,Y. 1991. Cutting work of the railway embankment by reinforcing method with steel bars, Tsuchi-to-Kiso, Monthly Journal of Japanese Society of SMFE, 39-4, pp.39-42 (in Japanese).