Geosynthetics: Applications, Design and Construction, De Groot, Den Hoedt & Termaat (eds)
© 1996 Balkema, Rotterdam. ISBN 90 5410 836 3

Seismic design of geosynthetic reinforced slopes

Laura Cavalera & Anna Brancucci
Dipartimento di Strutture, Geotecnica, Geologia applicata all'Ingegneria, Università degli Studi della Basilicata, Potenza, Italy

ABSTRACT: The aim of the present work is to define the general conditions under which a geosynthetic reinforcement is able to guarantee, in absence of other stabilization methods, the seismic safety of natural and artificial slopes.

The reinforced slope behaviour is presented in terms of permanent induced displacements for different failure modes of an overconsolidated clay in a second seismic italian region.

The main involved parameters are: the unstable ground thickness; the piezometric level; the average slope inclination; the geosynthetic tensile strength.

Local amplification effects are moreover considered.

The obtained numerical results, visualized in a series of tables and diagrams, are interpreted to define a seismic design procedure for geosynthetic slope stabilization which may be used in not unfrequent similar geotechnical conditions; on the other side different mechanical soil properties may request some attention in the traditional slope analysis steps, but they don't change the aim of the design procedure here presented.

1 INTRODUCTION

Dynamic slope stability methods are founded, as it is well known, on a preliminar comparison between the earthquake induced shear stesses and the dynamic shear strength of the involved materials.

When a significant loss of strength does not result, these methods lead to the calculation of the induced permanent displacement that the slope undergoes when an assigned earthquake, eventually corrected for the local amplification effects, applies.

In other words what it seems to be important, from a practical point of view, is the difference between the induced displacement and the allowable displacement relevant to that particular slope.

For the allowable displacement values general reference is made to the suggested ranges by Legg (1982) or by Wilson and Keefer (1985).

Another particular problem concerns the choice between an effective stress analysis and a total stress analysis which depends on the possibility to define correctly the induced pore pressure values.

Under seismic conditions this is very difficult, because the applied stress change is very rapid; not with standing the actual trend is to perform an effective stress analysis with an empirical evaluation of the induced pore pressures.

On the other side slope stability conditions, even for the static case, are dictated by several physical, mechanical, geometric parameters, that is to say: the size and the shape of the sliding mass, the initial effective stresses, the micro and macro structural mechanical soil properties, the hydraulic conditions, the applied esternal forces.

During a seismic event these three last factors may undergo some important variations with respect to time and to space.

Consequently it is not very simple to decide on which parameter it is necessary and sufficient to operate: many simultaneous stabilization plans are often considered in order to guarantee static and dynamic safety conditions.

Recently with the advent of industrial artificial materials which may play different roles (impermeabilizatio, drainage, filter, reinforcement, protection), by assuming the desired physical and mechanical properties, the opportunity to realize one only self consistent stabilization intervent seems to be reached.

As before mentioned, the aim of the present work is right to define the general conditions under which a geosynthetic reinforcement may guarantee, in absence of other stabilization intervents, the seismic safety of artificial and natural slopes.

The suggested design procedure refers to an overconsolidated clay, but the obtained results may easily extended to other materials or to different values of the seismic action intensity.

2 THE GEOSYNTHETIC REINFORCEMENT ROLE IN NATURAL OR ARTIFICIAL SLOPES

The reinforcement role into a slope is to guarantee the action of a tensile strenght in the direction of the reinforcement texture.

The determination of this additional contribution is a problem that can be solved with traditional limit equilibrium methods.

It is known that three possible failure modes may be considered: sliding along a plain surface; sliding along a circle surface; block sliding.

The design is carried out using an iterative procedure: at first it is fixed an initial reinforcement position on the base of experience, secondly a stability calculation is run according to the most probable failure surfaces.

If the safety factor results too low, the reinforcement position must be changed as it will be indicated and the process continues until suitable results for slope stability are reached.

It must be determined: number; vertical position and length of reinforcement which are needed to guarantee slope stability for all the possible failure modes.

The geosynthetic type usually used to reinforce a slope is the mono-oriented geogrid. It presents a high tensile strength only along one direction that is the same direction along which the slope eventually is sliding.

On the contrary, the bioriented geogrid has values lower than those typical for the mono-oriented type because the reinforcement acts along two ortogonal directions.

The geogrid choice is also dictated by the chance to make esternal vegetated type facing for the open mash geogrid structure.

The minimum geogrid length can be equal to half of the slope heigth, but sometimes a geogrid length/slope height ratio in excess of one is needed.

The geogrid vertical spacing can be uniform along the height slope to make easier the reinforcement installation works but a reduction can be adopted to increase the available tensile strength in the most critical slope zone that is the slope bottom.

The vertical spacing is usually in the range of 0.3÷1.5 m. The anchorage length can be assumed in the range of 0.5÷1 m for the geogrid types nowdays present on the market. The last one have a high maximum tensile resistance in the range of 40÷110 kN/m (Rimoldi & Ricciuti 1992).

For the transport modality and the rinforcement installation works, as the geogrid can be attacked by chemical and biological elements, due to possible creep phenomena and due to the global security factor that must be guaranteed an allowable tensile strength lower than the limit ones must be considered according to a reducing coefficient higher than or equal to two (Rimoldi 1987).

3 DYNAMIC ANALYSIS OF A REINFORCED SLOPE

In dynamic slope analysis the stability concept is associated to the occurrence of appreciable displacements. The permanent displacement calculation is carried out according to the hypotheses of the classic Newmark's work (1965). The slope is studied as a rigid block which slides with friction along an inclined plane. A force system is acting on the block; the seismic action is rappresentated by an inertia force causing the block to slide. If it results that the weight and the inertia forces resultant is into the friction cone, the block doesn't move and the seismic acceleration will result less than a determinate critical value. On the contrary, if the seismic acceleration is over this threshold, the block will be interested by some displacement.

Concluding, the probability that the displacement will occur depend on the threshold value which determines the start of the rigid block movement.

This is called critical acceleration or threshold acceleration ($Kc * g$, where Kc is the critical seismic coefficient and g is the gravity acceleration).

The critical coefficient is the masses multiplier that determines the equality between destabilizating forces and the shear resistance forces.

Under the hypotheses that the pore water pressure increase caused by the earthquake action is near to zero, the critical seismic coefficient depends on both slope geometry and soil mechanical characteristics.

When slope static safety coefficient is already less than one, Kc will result negative; it means absurdly that to have a balance between the shear strength and the destabilizating forces, it is necessary that the inertia force, which rappresents the seismic action, should act in the way to support the slope.

The accelerogram shape is another important factor to determine the displacement entity.

Firstly, if several accelerograms are given, it is impossible to know which of them will determine the highest value of displacement. In fact, the registration which has the maximum acceleration may be characterized by a peaks sequence that only for a few times the thereshold value will be over.

For this reason the final displacement, obtained by summing the partial ones, will be little.

Referring to the scheme of a rigid block on an inclined plane with friction, the relative displacement (x) between the block and the sliding surface, is calculated with a double integration of the following differential equation:

$$\ddot{x}(t) = \left[a(t) - Kc\, g\right] \frac{\cos(\phi' - \alpha)}{\cos\phi'} \qquad (3.1)$$

where: $\ddot{x}(t)$ = relative acceleration between the rigid block and the plane; a(t) = seismic acceleration; Kc =

critical seismic coefficient; g = gravity acceleration; ϕ' = internal friction angle; α = slope inclination.

The equation is the same for geosynthetic reinforced slopes.

As above mentioned the integration of the differential equation is run in the time intervals during which a(t) is greater than *Kc* by assuming the Newmark's hypotheses about the velocities variations law (Newmark 1965).

The determination of the critical seismic coefficient is very important to evaluate the slope displacement entity during a seismic event. The *Kc* exspressions are obtained for three tipical failure modes.

The following *Kc* expression is determined for a plain failure surface (indefinite slope):

$$Kc = \frac{A_1 + A_2 - A_3 + A_4}{A_5} \qquad (3.2)$$

with: $A_1 = c'/\cos\alpha$; $A_2 = \gamma\, z\, (\cos\alpha \tan\phi' - \operatorname{sen}\alpha)$; $A_3 = \gamma_w z_w \cos\alpha \tan\phi'$; $A_4 = T_{allow.} (\cos\alpha + \operatorname{sen}\alpha \tan\phi')$; $A_5 = \gamma\, z\, (\cos\alpha + \operatorname{sen}\alpha \tan\phi')$

where: c' = effective cohesion; α = slope inclination; γ = unit weight; z = slice height; ϕ' = internal friction angle; γ_w = water unit weight; z_w = water height above the sliding surface; $T_{allow.}$ = allowable tensile strenght of the laid geosynthetics into a unit width slice.

The following *Kc* expression is determined for a blocks failure mechanism (wedge method):

$$Kc = \frac{B_1 + B_2 - B_3 + B_4}{B_5} \qquad (3.3)$$

with: $B_1 = c'\, H/\operatorname{sen}\theta$; $B_2 = W (\cos\theta \tan\phi' - \operatorname{sen}\theta)$; $B_3 = U \tan\phi'$; $B_4 = S_{allow.} (\cos\theta + \operatorname{sen}\theta \tan\phi')$; $B_5 = W (\cos\theta + \operatorname{sen}\theta \tan\phi')$

where: H = sliding wedge height; θ = sliding surface inclination; W = sliding wedge weight; U = pore water pressure acting on the sliding surface; $S_{allow.}$ = total allowable tensile strength of the laid geosynthetics in the slope that cut the failure surface.

Finally the following *Kc* expression is determined for a circle failure surface:

$$Kc = \frac{\sum_{i=1}^{n}(C_1/C_2) + \sum_{i=1}^{m} C_3 - \sum_{i=1}^{n} C_4}{\sum_{i=1}^{n} C_5} \qquad (3.4)$$

with: $C_1 = [c'\, \Delta x_i + (w_i - u_i \cos\theta_i) \tan\phi']\, r$; $C_2 = \cos\theta_i (1 + \tan\phi' \tan\theta_i)$; $C_3 = T_{allow.\,i}\, y_i$; $C_4 = w_i\, r\, \operatorname{sen}\theta_i$; $C_5 = w_i\, y_{Gi}$

where: n = slices number; Δx_i = slice width; w_i = slice weight; u_i = pore water pressure acting on the slice base; θ_i = angle of intersection between the horizontal and the tangent to the slice center; r = circle failure radius; m = geosynthetic layers number; $T_{allow.\,i}$ = allowable geosynthetic tensile strength; y_i = moment arm for geosynthetic; y_{Gi} = moment arm for inertia force.

If it seems that local effects are significant, it is necessary to perform a local amplification study. In other words, the permanent displacement has to be determined only if there are and are known the accelerogram modifications along the slope height due to the ground deformability, the slope geometry and the geosynthetic presence.

4 DISPLACEMENT ANALYSIS AND LOCAL AMPLIFICATION EFFECTS

Slope dynamic analysis is conducted with reference to the overconsolidated clays. They generally have a macrostructure characterized by cracks and joints.

These give the maximum discontinuity and the formation "mass" permeability can be bigger than that of the same intacted meterial, so for these cracked materials only drained conditions are consistent.

In reality even when the overconsolidated clay is not cracked, the pore water pressure increase caused by external load application is very little or negative, so the effective stresses in undrained conditions may be higher than those ones relevant to the drained and thus unsafest conditions.

The following both mechanical and physical ground characteristics are considered: $\phi' = 35°$, $c' = 0$ $\gamma_{saturated} = 20.6$ kN/m³ and $\gamma_{drive} = 19$ kN/m³.

The mono-oriented geogrid considered in the analysis is characterized by an allowable tensile strenght of 20 kN/m or 40 kN/m.

The bedrock seismic input considered for the permanent displacement analysis is a time history of horizontal accelerograms. The vertical component of excitement acceleration is disregarded in base to the Franklin and Chang (1977) experience. They have showed that both safety factor and permanent displacements have a weak dependence on the *Kc* inclination with respect to the horizontal direction.

Eight artificial accelerograms obtained from the italian in force code spectrum (D.M. 24/01/1986) for an overconsolidated material in a second seismic region are used for the analysis. They have 22.00 seconds length and different frequency contents.

The double integration of the motion differential equation is resolved subdividing the seismic signal length in 0.01 sec. intervals and in these ones a linear variation law is assumed for the acceleration.

Dynamic stability analysis is firstly presented for the case of an indefinite slope. Several unstable ground thicknesses are, in particular, considered and for each of these ones, different both piezometric level and free field inclination are moreover

examined. Some results obtained in the study are showed in Tab. 1 for both natural and reinforced slopes. They are expressed in terms of critical seismic coefficient and in terms of the lowest and the highest induced permanent displacements by the eight accelerograms.

Reinforced slope analysis are carried out considering the presence of only one geogrid into a unit width slice.

Vulnerability degrees may be expressed with reference to the critical seismic coefficient (Legg 1982) or on the basis of the relation existing between the observed displacement and the type of damage (Legg 1982, Wilson & Keefer 1985).

In Tab. 1 it is possible to ascertain how the only geosynthetic presence causes a remarkable increment of the critical seismic coefficient for particular hydraulic and goemetric conditions. Consequently the induced permanent displacement and the type of damage are reduced. On the contrary, in other hydraulic and geometric conditions, the damage is not of weak entity, so other stabilization solutions will be needed in conjunction with the reinforced soil technique.

A set of rapresentative design curves may be drawn in order to allow an immediate slope dynamic analysis and eventualy a reinforced intervent plan relating the induced permanent displacement versus the critical seismic coefficient for each of the eight accelerograms considered in the analysis (Fig. 1).

Of course the induced permanent displacements which appear in Fig. 1 must be multiplied for $\cos(\phi'-\alpha)/\cos\phi'$ according to the motion differential equation (3.1).

For natural or artificial slopes stability analysis in seismic condition, by comparing the critical acceleration ($Kc * g$) with the maximum acceleration of each design artificial accelerograms, it is possible to know if there is or there is not some slope movement. In the first case, ones that the Kc value is known, it is possible to determine on the y axis in Fig. 1 the permanent displacement value which will allow to judge the stability condition in dynamic situation.

Table 1 - Critical seismic coefficient (Kc) and induced permanent displacement (x) range, for both natural and reinforced indefinite slopes.

Unstable ground thickness	Hydraulic Geometric Characteristics		Natural Slopes		Reinforced slopes $T_{allow.}$ = 20 kN/m		Reinforced slopes $T_{allow.}$ = 40 kN/m	
			Kc	x (cm)	Kc	x (cm)	Kc	x (cm)
z = 2 m	zw = 0	α = 20°	0.268	0.68÷5.19	0.763	0	1.257	0
		α = 25°	0.176	8.40÷31.39	0.653	0	1.130	0
		α = 30°	0.087	52.44÷103.90	0.543	0	1.00	0
	zw = z/2	α = 20°	0.133	21.00÷48.51	0.588	0	1.044	0
		α = 25°	0.048	97.34÷193.02	0.488	0	0.928	0
		α = 30°	-0.034	—	0.387	0.01÷0.28	0.807	0
	zw = z	α = 20°	-0.003	—	0.453	0÷0.04	0.909	0
		α = 25°	-0.080	—	0.360	0.05÷0.56	0.800	0
		α = 30°	-0.155	—	0.266	0.83÷5.50	0.686	0
z = 5 m	zw = 0	α = 20°	0.268	0.68÷5.19	0.466	0÷0.02	0.664	0
		α = 25°	0.176	8.40÷31.39	0.367	0.04÷0.48	0.557	0
		α = 30°	0.087	52.44÷103.90	0.269	0.70÷5.19	0.452	0÷0.05
	zw = z/2	α = 20°	0.133	21.00÷48.51	0.315	0.19÷2.42	0.497	0
		α = 25°	0.048	97.34÷193.02	0.224	2.57÷16.73	0.400	0÷0.20
		α = 30°	-0.034	—	0.135	20.86÷49.08	0.303	0.27÷2.94
	zw = z	α = 20°	-0.003	—	0.179	7.77÷29.94	0.362	0.05÷0.52
		α = 25°	-0.080	—	0.096	46.55÷88.82	0.272	0.59÷4.93
		α = 30°	-0.155	—	0.013	177.00÷326.57	0.182	7.45÷30.15
z = 10 m	zw = 0	α = 20°	0.268	0.68÷5.19	0.367	0.03÷0.47	0.465	0÷0.02
		α = 25°	0.176	8.40÷31.39	0.271	0.61÷5.00	0.367	0.04÷0.48
		α = 30°	0.087	52.44÷103.90	0.179	8.01÷30.88	0.270	0.63÷5.12
	zw = z/2	α = 20°	0.133	21.00÷48.51	0.224	2.52÷16.41	0.315	0.19÷2.42
		α = 25°	0.048	97.34÷193.02	0.141	17.21÷45.44	0.224	2.57÷16.73
		α = 30°	-0.034	—	0.051	93.01÷183.39	0.135	20.86÷49.08
	zw = z	α = 20°	-0.003	—	0.088	50.27÷99.51	0.179	7.77÷29.94
		α = 25°	-0.080	—	0.008	197.30÷341.06	0.096	46.55÷88.82
		α = 30°	-0.155	—	-0.070	—	0.013	177.00÷326.57

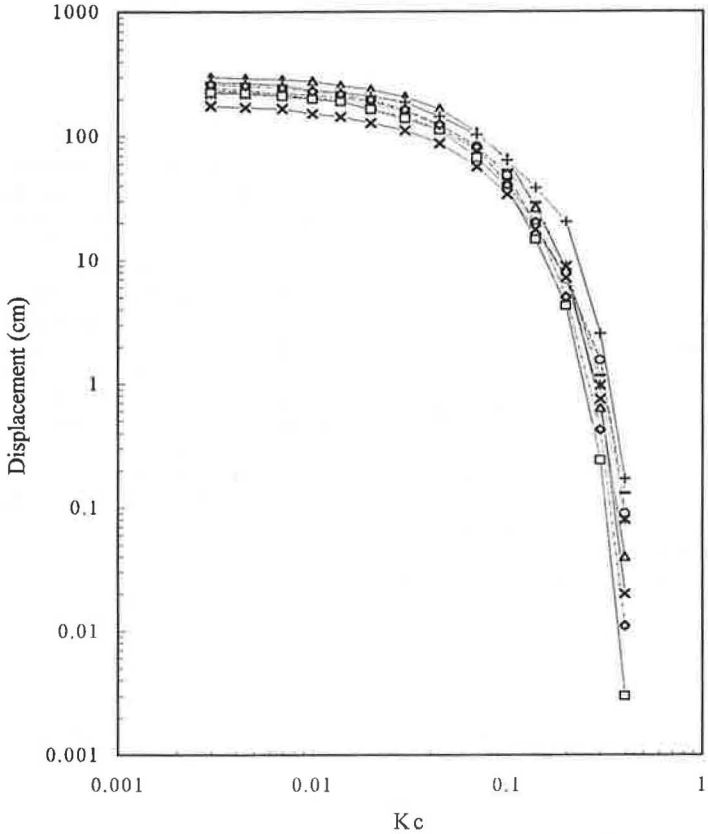

Figure 1 - Induced permanent displacements versus critical seismic coefficient for eight artificial accelerograms obtained from the italian code spectrum for an overconsolidated material in a second seismic region.

If the maximum induced displacement will result too large the maximum allowable displacement will be fixed, than the corresponding critical seismic coefficient will be determined on the appropriate design curve.

Finally the allowable geosynthetic tensile strength acting into a unit slice width will be calculated by means of expression (3.2).

The use of the displacement-critical seismic coefficient diagram isn't limited to the indefinite slope case, but it is relative to any failure modes type.

The attention may be turned on the use of the specific critical seismic coefficient expressions (paragraph 3) and to considere α as the inclination that the resultant of the tangential force acting along the sliding surface forms with the horizontal (Franklin & Chang 1977).

Referring to a circle failure surface, the calculation results are presented for a 10 m height excavation having an inclination of 50° and situated in a second seismic italian region. The bedrock is 18 m deep from the free field. With these characteristics the excavation is unstable also in static condition.

The pseudostatic calculated critical surface is showed in Fig. 2.

It is decided to reinforce the excavation using two solutions in order to have a pseudostatic safety factor higher or equal to 1.3 according to the italian in force code. The first design considers the geogrids with allowable tensile strength of 20 kN/m having an uniform vertical spacing of 0.50 m (Fig. 2); the second one provides the geogrids with allowable tensile strength of 40 kN/m having an uniform vertical spacing of 1 m.

The reinforced excavation critical seismic coefficients are bigger than the maximum acceleration of the design accelerograms, so there aren't induced displacement by the design accelerograms.

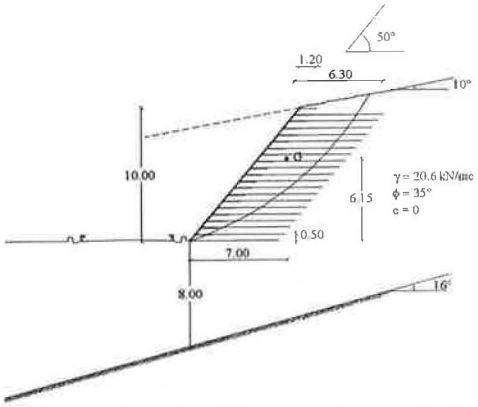

Figure 2 - A design example for a circle failure surface.

The reinforced slope design which is carried out by means of a pseudostatic analysis will result extremely conservative. On the contrary, if for instance a 5 cm allowable induced permanent displacement is fixed as an α value of 39° results from calculation, a value of 0.27 for the critical seismic coefficient is obtained on the most dangerous curve in Fig. 1. If uniform vertical spacing is 0.5 m or 1 m by introducing the *Kc* value in the expression (3.4) the respective 12 kN/m and 24 kN/m allowable geosynthetic tensile strength values are calculated.

Another way is to fix the allowable geosynthetic tensile strength and to determine the uniform vertical spacing by means of expression (3.4).

As already mentioned local amplification effects are often relevant, so the modification that the geosynthetic presence has on the acceleration is evaluated using a finite element method with an appropriate calcolation procedure (Brancucci & Cavalera 1995). The evaluation is expressed in terms of the maximum acceleration that the design accelerogram reachs propagating from the bedrock to the centre of gravity of the sliding block. With the same calculation code, it is possible to know the maximum tensile stress acting into the geosynthetic layer because of the seismic action. Previous authors' work showed that the tensile strenght increment induced by the seismic action into geosynthetic is a very little percentual of the allowable strength.

Moreover local amplification doesn't seem to be conditioned by the geosynthetic presence. On the other side local seismic effects, with and without reinforcement, result to depend on the bedrock depth and, in less part, on the slope geometry.

Concluding local amplification effects on the maximum acceleration into the slope with respect to the maximum acceleration value at the bedrock are not very significant for small potentially unstable ground thickness ($z \leq 10$ m) whether or not a geosynthetic reinforcement is present. In this case the slope vulnerability, expressed in terms of deformation, may be estimated referring to the bedrock accelerograms (Tab. 1 and Fig. 1).

5 CONCLUSIONS

The analytical results presented in this work are elaborated to define a seismic geosynthetic design procedure for potentially unstable slopes. The reference to the indefinite slope case (Tab. 1) is firstly used to outline the geosynthetic reinforcement role if a dynamic stability analysis is carried out for different hydraulic, stratigraphic and geometric conditions of the slope. The extension to other failure modes and to other material properties are simply synthesized in the subsequent figures. In fact different failure modes lead to different values of *Kc*, whose expressions are herein defined, while a different dynamic behaviour of the involved materials may request some attention in the traditional slope analysis steps, like the evaluation of the induced seismic pore pressure, but don't change the proposed procedure. It is moreover outlined the difference which may result in the designing solution if a pseudostatic approach is used instead of the more realistic dynamic one.

A concluding comment is relevant to the local amplification effects. The conditions under which they may be ignored are suggested, but when they seem to be important, the geosynthetic reinforcement design may once more carried out in order to obtain final *Kc* values which are greater than the amplified values of the bedrock seismic acceleration input.

REFERENCES

Brancucci, A. & Cavalera, L. 1995. Sistemazione di pendii in zona sismica con geosintetici di rinforzo. *L'ingegneria sismica in Italia*. 7th Nat. Con. Siena. Vol. I: 103-112.

Franklin, A.G. & Chang, F.K. 1977. Earthquake resistance of earth and rock-fill dams. Report 5 - Permanent displacements of earth embankments by Newmark sliding block analysis. U.S. Army Engineer Waterways Experiment Station.

Legg, G. et al. 1982. Seismic hazard mapping for lifeline vulnerability analysis. 3rd Int. Con. on Microz. Seattle.

Newmark, N.W. 1965. Effects of earthquakes on dams and embankments. The fifth Rankine Lecture of the British Geotechnical Society. *Geotechnique*. Vol. XV. N. 2.

Rimoldi, P. 1987. Il progetto dei pendii ripidi rinforzati con geogriglie in plastica. *Rivista italiana di geotecnica*. N. 4.

Rimoldi, P. & Ricciuti, A. 1992. The role of geogrid reinforced embankments in landslide stabilization: theory and practice in Italy. VI Int. Symp. on Landslides. Christchurch, New Zealand. 10-14.

Wilson, R. & Keefer, D. 1985. Predicting areal limits of earthquake induced sliding in U.S. *Geological Survey Professional Paper*. Washington: Ziony, J.