Geosynthetics - 7th ICG - Delmas, Gourc & Girard (eds) © 2002 Swets & Zeitlinger, Lisse ISBN 90 5809 523 1

Vegas GRS mini pier experiment and the postulate of zero volume change

M. T. ADAMS, Federal Highway Administration, McLean, VA. USA
C. P. LILLIS, University of Massachusetts, Amherst, USA
J. T. H. WU, University of Colorado, Denver, USA
K. KETCHART, Walailak University, Nakorn Si Thammarat, Thailand

ABSTRACT: This paper describes the load test results of a large-scale Geosynthetic Reinforced Soil (GRS) mass, referred to as the "Vegas Mini Pier." The GRS mass was vertically loaded to an average vertical stress of 1000kPa. Vertical settlement and lateral deformation of the GRS mass were measured during the load test to monitor the performance. It was found that there is no net volume change as a result of vertical compression and lateral expansion of the GRS mass. The same behavior has been observed in other full-scale GRS structures. Based on the observed deformation characteristics, the "postulate of zero volume change" was proposed. The postulate can be used to estimate the maximum lateral deformation as a function of vertical settlement for various GRS structures and has been applied to aid in the design of two full-scale GRS bridge embankments/abutments at the Federal Highway Administration's (FHWA) research facility in McLean, VA.

1 INTRODUCTION

The Vegas Mini Pier was constructed and load tested by members of the FHWA Geotechnical Team in January of 2000. The pier was constructed to demonstrate GRS technology to the Segmental Retaining Wall Industry at the National Concrete Masonry Association's annual exposition in Las Vegas, Nevada. The mini pier was designed to support vertical load; it was vertically loaded to 1246 kN (280 kips) or the equivalent of a vertical pressure of 1000 kPa (146lbs/in^2). The mini pier had dimensions of 1.12m x 1.12m x 2.44m. The results of the Vegas mini pier experiment and other full-scale GRS experiments show a volumetric relationship between vertical settlement and lateral deformation of the wall faces. The "postulate of zero volume change" is proposed and has been used to aid in the design of full scale GRS structures.

2 DESIGN AND CONSTRUCTION

The Vegas Mini Pier was constructed with alternating layers of compacted granular fill (road base) and geotextile. Figures 1 and 2 show, respectively, the layout of Segmental Retaining Wall (SRW) block and reinforcement schedule. The SRW block was connected to the GRS mass by friction created from the reinforcement extending between the rows of block. For this experiment, reinforcement was spaced at 150mm (6 inches) with a sheet of geotextile between each course of block. In the top two rows, intermediate layers were placed to form a spacing of 75mm (3 inches). The purpose of the additional layers was to increase the soil confinement directly beneath the bearing area to minimize lateral spreading of the SRW blocks and transfer stress more evenly into the GRS mass. The reinforcement was a woven polypropylene geotextile, with a wide width tensile strength of 35kN/m (2400 lbs/ft) per ASTM D4595. Although the method used to construct the Vegas Mini Pier is not considered conventional, the materials are commonly used.

The modular block was solid dry cast concrete and had a split-face. The height of the block was 6-inches (150mm) and equal to the spacing of the reinforcement. The block dimensions are illustrated in Figure 1. The unit weight of each block was 37kg (82lbs). The blocks were connected to the GRS without the aid of pins or mechanical connection. To form the corners, the block was split as shown in Figure 1. The fill selected to construct the Vegas Mini Pier was a graded granular gravel (road-base).

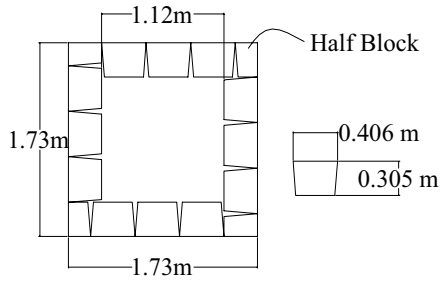

Figure 1. Plan view of experiment (note concrete modular SRW blocks surrounding the GRS mass)

The gravel is classified as a GP-GM soil according to ASTM D 2488. Compaction was performed with a hand tamper. Considerable compactive effort was applied on each lift of fill. Soil density measurements were not taken during the construction process.

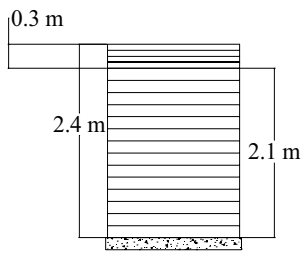

Figure 2. Elevation view of experiment (note reinforcement spacing).

3 TEST SETUP

3.1 *Reaction Assembly*

As shown in the figure 3 photo, The GRS mass was built on a concrete base pad. The base pad was elevated on the cinderblock to make room for the two-bolted channel beams. Figures 4a and 4b illustrate the load test setup. The top set of bolted channels was supported on the top concrete pad. The top concrete was centered on the GRS mass. The top pad is not supported on the SRW block. The upper and lower channel beams were coupled together with threaded bar. Four hollow core hydraulic jacks were bolted to the top channel beams. All jacks were connected to a manifold and controlled with a servo- controlled hydraulic pump.

Figure 3. Photo of experiment after load test.

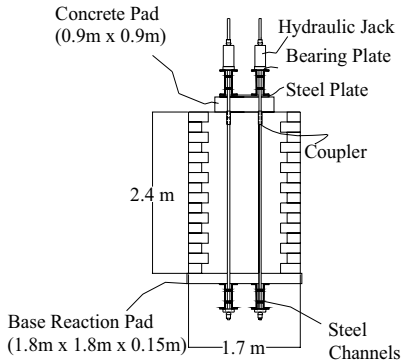

Figure 4a. Side view of experiment.

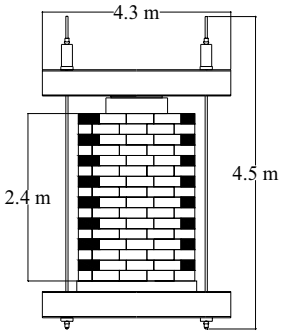

Figure 4b. Face view of experiment.

3.2 *Test Procedure*

Vertical stress was applied in increments of 35kPa. Load was measured with a hydraulic oil pressure gauge and load cell. Vertical stress was calculated by dividing the sum of the force from each jack by the area of the GRS mass. The top area of the GRS mass was 1.1m x 1.1m. The area of the top pad was 0.91m x 0.91m, less than the area of the GRS mass.

Each load increment was maintained between 5 to 7 minutes. Vertical and lateral deformation of the GRS mass was recorded during each load increment. Deformations were measured with dial gauges referenced off scaffolding next to the mini pier. Vertical settlement was measured on the four corners of the top pad. Lateral deformation was measured at five points along one wall face of the GRS mass. Ceramic tiles were glued to the concrete pad and SRW block to create a smooth surface for accurate measurement of deformation.

4 TEST RESULTS

4.1 *Displacements*

Figure 5 shows the relationship between the average vertical stress (s_v) and the vertical settlement (S_v). The value of S_v was plotted as an average of the measurements at the four corners of the loading pad. The collection of settlement data terminated at about 800kPa because of the inability to reset the dial indicators. The three settlement values after 800kPa are estimated from lateral deformation measurements and the conservation of volume as explained in a following section. It is seen that the relationship between s_v and S_v of the GRS mass was essentially linear although the GRS mass was a little stiffer for s_v < 80 kPa. The overall vertical stiffness of the GRS mass was about 37,000 kPa.

Figure 5 also shows the relationship between the average vertical stress (s_v) and the maximum lateral displacement (D_L). The maximum load applied was 1246kN (280kips) equivalent to an average vertical stress of 1000kPa (146lbs/in^2). Measurement of D_L continued throughout the course of the load test. Much like the deformation behavior in the vertical direction, the GRS mass was somewhat stiffer for s_v < 80 kPa. The relationship between s_v and D_L of the GRS mass was essentially linear up to s_v = 600 kPa, thereafter the rate of lateral deformation became slightly larger.

Figure 6 shows the profiles of lateral displacement along the wall height for different values of s_v. Note the development of the bulge during the load test. The maximum bulge shifts from the middle of the wall toward the top ¼ point with increasing values of s_v. Also note that the top portion of the wall moved inward at s_v = 82 kPa before gradually moving outward with increasing s_v. Similar behavior has been observed in other full-scale loading tests of GRS structures (e.g., Ketchart and Wu, 1997). This is believed to be due to the significant downward bowing of the reinforcement sheets beneath the loading pad at s_v = 82 kPa. Apparently, as bowing occurred these reinforcement sheets "pulled" the facing blocks inward near the top of the wall. As the wall began to bulge near the mid-height, the top portion of the wall also moved outward.

It should be pointed out that the highest point at which lateral movement of the wall was measured was at wall height = 2.25m (89 inches). With linear extrapolation, the lateral movement at the top edge of the wall was found to be very small after the top edge began to move outward. Due to large friction at the base of the pier, the lateral movement at the base was assumed to be negligible. A simplified lateral deformation signature is shown in Figure 7. In the Figure, the location of the maximum lateral displacement, D_L, is assumed to occur at mid-height of the wall. The total dis-

placed volume of the lateral displacement, however, is independent of the location of D_L.

4.2 *Strains*

To evaluate deformation characteristics of the GRS mass as a composite material, the displacements of the Vegas Mini Pier were normalized with respect to the initial dimensions of the pier. Two strains are defined: vertical strain and maximum lateral strain. The vertical strain, $\varepsilon_v = S_v / H_o$, where S_v is the settlement and H_o is the initial height of the pier. The maximum lateral strain, $\varepsilon_L = D_L /(W/2)$, where D_L is the maximum lateral displacement on one face of the pier and (W/2) is one half of the initial width of the pier. It is noted that S_v and D_L are both a function of the vertically applied stress, so as the values of ε_v and $\tilde{\varepsilon}_L$

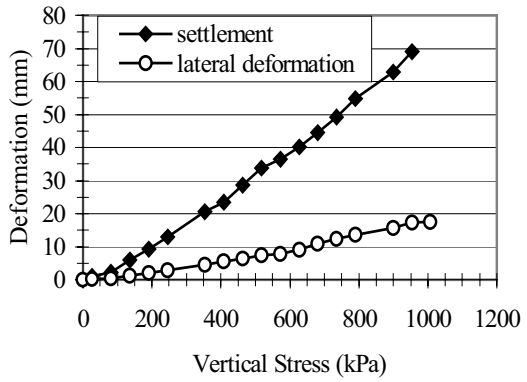

Figure 5. Measured values for average settlement and maximum lateral deformation (note: The last three settlement values are estimated from the lateral deformation.)

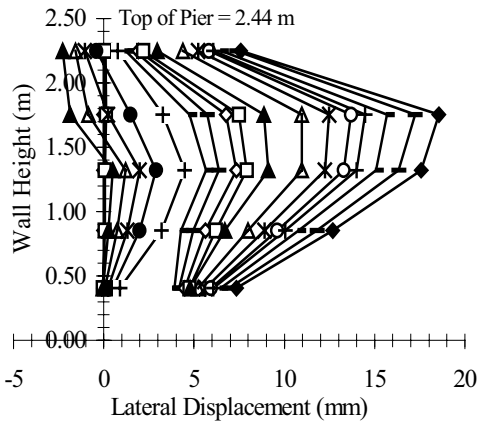

Figure 6. Measured profile of lateral deformation.

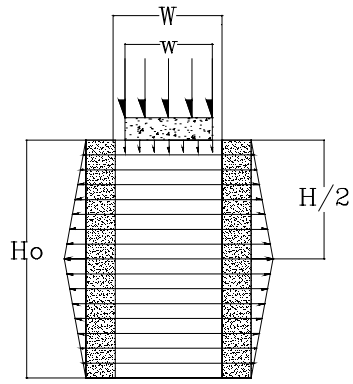

Figure 7. Simplified lateral deformation signature.

Figure 8 shows the vertical strain and maximum lateral strain as a function of applied vertical stress for the Vegas Mini Pier. It is seen that the values of vertical strain and lateral strain are nearly equal. The maximum lateral strain was slightly higher than the vertical strain as the stress passed 650kPa, approximately the stress at which the maximum lateral displacement begins to deviate from a linear response.

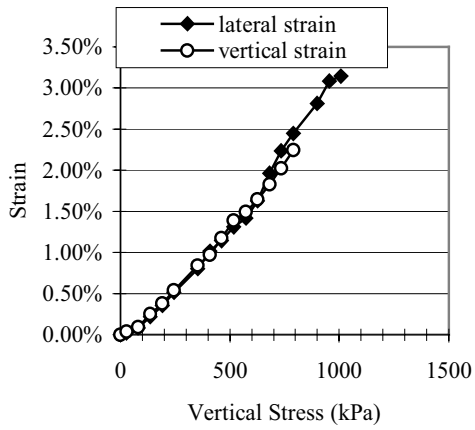

Figure 8. Vertical and Lateral strain as function of stress

4.3 *Design Implications*

The strains in a GRS mass can be used to estimate the maximum allowable load on a given GRS system. The relationship between vertical stress and maximum lateral deformation of the Vegas Mini Pier was nearly linear up to a vertical stress of 600kPa. At the peak stress of 1000kPa, the maximum lateral strain was about 3.0%. It is believed that at $\varepsilon_L = 3\%$ the GRS mass was approaching a state of accelerated soil creep or the onset of failure.

It is suggested that the allowable load for a GRS structure be estimated based on the allowable strain within the GRS mass. A combination of ε_v, ε_L and the lateral displacement should be considered for any particular application. For example, a "good" working stress for a GRS mass in a load bearing application, if constructed similar to the Vegas Mini Pier, would be at $\varepsilon_v = 0.5\%$ (Note that ε_v as a function of s_v remained approximately linear to $\varepsilon_v > 2.0\%$). The selection of an allowable D_L is probably dependent on ε_v as it relates to load geometry, the GRS mass, and the facing element. As in the case of the Vegas Mini Pier, it can be assumed that $\varepsilon_L = \varepsilon_v$. The allowable ε_L, therefore, is 0.5%. It is the

experience of the authors that a prism of GRS mass constructed with SRW blocks does not produce any visual distress at $\varepsilon_L = 0.5\%$ (Adams, 1997). It should be noted that the lateral strain limit, $\varepsilon_L = 0.5\%$, is not part of any official SRW design specification. The limit of $\varepsilon_L = 0.5\%$ produces satisfactory results for a prism of GRS mass constructed with SRW blocks connected to the GRS mass with friction.

In the case of a prism of GRS mass, at $\varepsilon_L > 0.5\%$, it has been noted that some SRW blocks are susceptible to cracks particularly where the blocks meet to form corners. The authors believe the rate of loading may also have an effect on the development of cracks. The photo in Figure 3 shows the lateral spreading of the SRW blocks at the peak vertical stress of 1000kPa. It is very conceivable that the allowable ε_L along the face of a straight wall would be greater than 0.5% and not show any real distress because of the lack of corners. For this reason, it is probably necessary to evaluate the vertical strain within the GRS mass separately from the lateral deformation of the facing element.

Allowable stress limits, as outlined in the FHWA Manual Demo 82, recommend that vertical stress be limited to 200kPa and that the center of bearing be set back no less than 1.0m from the wall face. In the case of the Vegas Mini Pier, the GRS mass was uniformly loaded. The footprint of the spread footing was setback about 0.2m from each face; the load was on the GRS mass and bearing stress was calculated over the base area of the GRS mass.

At σ_v = 200kPa, the GRS mass performed very well: S_v= 9.5mm and D_L= 2.0mm, $\varepsilon_v = 0.39\%$, and $\varepsilon_L = 0.36\%$. Although ε_L was within the 0.5% limit, is should be noted that the stiffness was compromised slightly because the soil was compacted with a hand tamper rather than a mechanical vibratory compactor.

The deformation behavior of a GRS system depends primarily on the soil stiffness. For this reason, quality, well-compacted fill is critical. The proximity of the surcharge to the face of the wall, as well as the rate of applied stress, may also inhibit the gradual release of lateral stress in the blocks and cause some to crack. This has been noticed with blocks of poor quality or uneven height.

The modular blocks have a secondary effect on the structural integrity of a GRS system constructed with closely spaced reinforcement (i.e. $\leq$ 0.2m). Particularly, in the case for wall applications without surcharge. However, quality blocks are essential to the acceptance of the technology. Previous studies on GRS for load bearing applications has been reported by Tatsuoka et al., 1997; Ketchart & Wu, 1997; Uchimura, et. al., 1998, and Adams, et al., 1999.

On a related note, a topic of contention is the magnitude of geosynthetic strain in a reinforced soil system. In the case of this GRS mass constructed with closely spaced reinforcement ($\leq$0.2m), the reinforcement strain can be assumed to be equal to ε_L, which is a worst case scenario in design.

5 POSTULATE OF ZERO VOLUME CHANGE

5.1 *Measured volumetric behavior*

The reduction in total volume as a result of settlement at the top of the pier is $V_{top} = A_{sf} \times S_v$, where A_{sf} is the area of the spread footing, w^2. In the case of the Vegas Mini Pier, it is tacitly assumed that $A_{sf} = w^2 = W^2 = 1.25m^2$, where W is the width of the GRS mass (see Figure 7). The reason for this assumption is that the footprint of the load pad was near the edge of the GRS mass. In addition, to more uniformly distribute load into the GRS mass, the top two rows of modular blocks had a very small reinforcement spacing of 76mm (3 inches).

The increase in total volume as a result of lateral expansion on the four sides of the pier can be determined from the simplified lateral deformation signature (see Figure 7). The increase in volume is $V_{lateral} = 4 \times V_{face} = 4 \times (H_o \times W \times D_L/2)$, where V_{face} is the volume of lateral expansion on one face of the wall. Note that each face of the pier is assumed to deform equally.

Figure 9 shows the relationship between vertical stress and V_{top} and also $V_{lateral}$. Figure 9 indicates that V_{top} and $V_{lateral}$, as determined in the manner described above, are nearly equal to each other throughout the experiment. This behavior differs from what has been observed in unreinforced soil masses, in which there is generally appreciable net volume change, at least before a failure state is reached. An investigation of volume change behavior in other GRS structures was subsequently carried out.

Upon examining the measured deformation of other GRS structures, of which the granular fill was well compacted (compacted to at least 95% of the Standard Proctor), reinforcement was closely spaced (that is, spacing $\leq$ .2m), and with SRW modular block facing, a similar relationship was observed between V_{top} and $V_{lateral}$. Figure 10 shows the relationship between V_{top} and $V_{lateral}$ for full-scale Federal Highway Administration (FHWA) GRS Pier (Adams, 1997 and Wu et el, 2001). A photo of the GRS pier is shown in Figure 11; the dimensions of the FHWA pier are 5.4m in height 3.6mx 4.8m at the base. The walls of the structure are sloped 20:1. This example also supports the fact that V_{top} and $V_{lateral}$, as determined in the manner described above, are nearly equal. However, note that in both examples, (figures 9 and 10), the volume gained exceeds the volume lost between 600kPa and 700kPa.

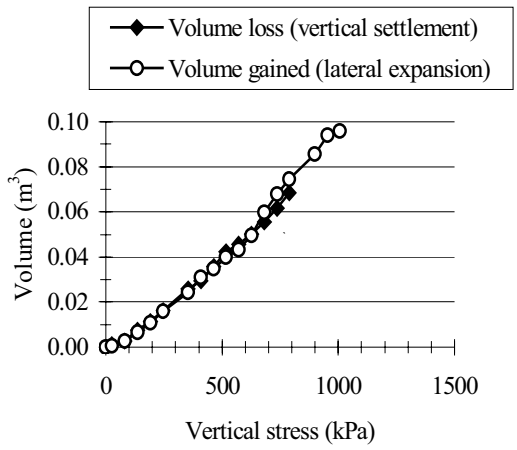

Figure 9. Volumetric relationship between vertical settlement and lateral deformation for the Vegas Mini Pier.

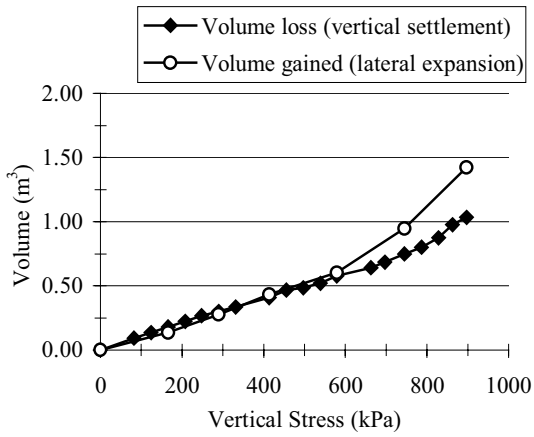

Figure 10. Volumetric relationship between vertical settlement and lateral deformation for the FHWA Pier.

6 APPLICATIONS

By employing the postulate of zero volume change, the maximum lateral displacement of a GRS structure can be estimated from the settlement, and vice-versa.

Recently, two full-scale GRS embankments/abutments were constructed at the FHWA research facility in McLean, VA, USA. The primary purpose of the project was to construct a bridge testing facility. As part of the project various aspect of the technology were demonstrated, tested and refined.

Figure 11. Photo of FHWA GRS pier.

As shown in the photo in figure 12, a tunnel was constructed through one of the approachways. The purpose of constructing the tunnel was to: 1) demonstrate the versatility of GRS technology; 2) test the proximity of concentrated vertical load near the face of a GRS wall; 3) compare the effect of reinforcement strength; 4) evaluate the long term performance of a GRS wall under a sustained vertical stress of 180kPa; and 5) test the ability to predict the deformation of the GRS wall due to the applied vertical stress.

Results from previous experiments, the FHWA GRS pier (figure 11) and another large model pier experiment conducted at FHWA were used to predict the deformation of the tunnel walls. The dimensions of the large model pier experiment were 1.0m x 1.0m x 1.9m in height, similar to that of the Vegas mini pier. Figure 13 shows the relationship of ε_v as function of σ_v for the large model experiment and FHWA pier.

Before explaining the calculations to estimate the deformation of the tunnel walls, it should be noted that there are some differences between the large model experiment, the FHWA pier and the GRS mass supporting the soil above the tunnel in the bridge abutment. All three features were constructed with the same fill material and compactive effort. Both the FHWA pier and the large model experiment were constructed with a reinforcement spacing of 0.2m. The strength of reinforcements used in the FHWA pier and large model experiment was 70kN/m and 21.0kN/m, respectively. The FHWA pier was constructed and load tested with the modular blocks. The modular blocks were removed before testing the large model pier. The reinforcement spacing used to construct the GRS mass support the tunnel was 0.15m. As shown in figure 13, the deviation of ε_v between the two experiments after 200kPa is probably the secondary effect of the strength of reinforcement and the supplemental confinement created by the modular block in the FHWA pier. The calculated stress on the strip footing due to the soil upon the tunnel roof was 190kPa. As shown in figure 13, the estimated ε_v is 0.00475. Figure 14 shows a simplified sketch of the tunnel wall. Multiplying this value by H_o= 2.4m, height of the tunnel wall, the estimated settlement at 190 kPa is 11.4mm. It should be noted that the ε_v for the Vegas Mini pier at σ_v = 200kPa, was 0.0039.

The reinforcement spacing, reinforcement strength and modular block used to construct the Vegas mini pier were the same as that used to build the tunnel.

Figure 12. Photo of FHWA GRS bridge abutment (note tunnel beneath stairs)

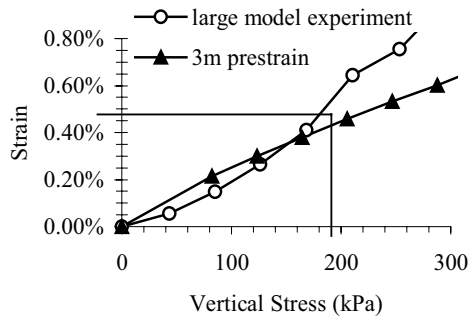

Figure 13. Vertical strain as function of stress for the large model experiment and FHWA pier.

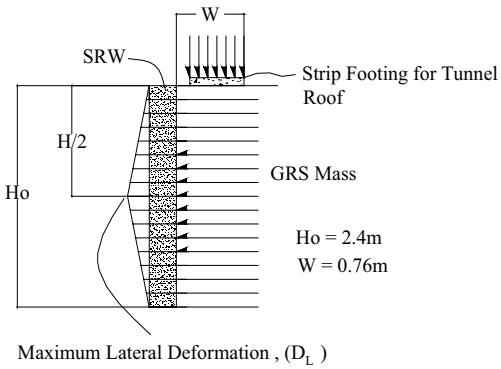

Figure 14. Schematic of GRS abutment tunnel wall.

Figure 15 shows the relationship of measured settlement with respect to vertical stress for the spread footings supporting the tunnel roof. The settlement presented is the average values for both strip-spread footings supporting the tunnel roof and soil over burden. The measured settlement at the completion of the approachway was 8.3mm. An additional 3mm settlement has occurred since the completion of the project almost three years ago.

Applying the postulate of zero volume change, the maximum lateral displacement of the tunnel walls was predicted as follows. Assuming a uniformly loaded vertical wall in plane strain conditions with Width/Height = W/H_o. (maximum lateral displacement, D_L, occurs in one direction along one wall face and $\varepsilon_L = D_L/W$).
$V_{top} = (W^2 \times S_v)$. $V_{(face)} = (D_L \times H_o \times W)/2$.
Since, $V_{top} = V_{face,}$ then, $(W^2 \times S_v) = (D_L \times H_o \times W)/2$.
i.e., $D_L = (2 \times W \times S_v)/ H_o = 7.2$mm
Note that $\varepsilon_L = D_L/L_o = ((2 \times W \times S_v)/ H_o)/W = 2 \times S_v / H_o$
Since, $\varepsilon_v = S_v/H_o$, thus, $\varepsilon_L = 2 \times \varepsilon_v$

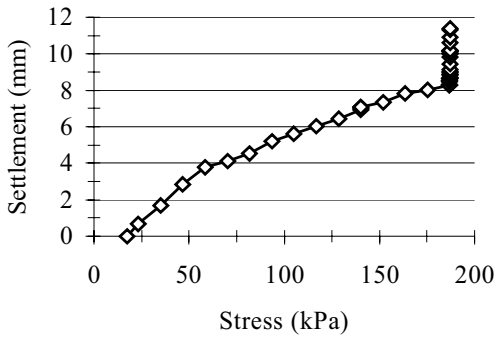

Figure 15. Average settlement of strip spread footing supporting the tunnel roof.

7 SUMMARY AND CONCLUSIONS

The Vegas Mini Pier was constructed and load tested to investigate the load carrying capacity and deformation characteristics of a GRS mass. The GRS mass was vertically loaded to an average vertical stress of 1000kPa. Vertical settlement and lateral deformation of the GRS mass were measured during the load test to monitor the performance.

The Vegas Mini Pier experiment showed that:

- The relationship between the applied vertical stress and the vertical settlement was essentially linear. The vertical stiffness was about 37,000kPa.
- The location of the maximum lateral movement shifted from the middle of the wall toward the top ¼ point with increased applied vertical stress.
- The vertical strain and the maximum lateral strain of the pier were nearly equal. The maximum lateral strain was slightly greater than the vertical strain above 650 kPa vertical stress.

It was also found that the reduction in volume due to vertical compression was nearly equal to the increase in volume due to lateral expansion of the pier -- provided that the latter is calculated by using the simplified lateral displacement signature. The "postulate of zero volume change" was proposed based on the above observation. The postulate was verified through examining the deformation behavior of other full scale GRS structures constructed in a similar manner: well-compacted fill, closely spaced reinforcement layers, and SRW modular block facing. The postulate of zero volume change can be employed to estimate the maximum lateral displacement for a given settlement of a GRS structures.

The authors suggest that an allowable stress on a GRS mass be dictated by allowable deformation, either in terms of allowable vertical strain within the GRS mass or allowable lateral deformation of the facing elements. The authors further suggest that an allowable lateral strain of 0.5% be used in design of GRS structures constructed and loaded similar to the Vegas Mini Pier.

8 AKNOWLEDGEMENTS

The authors would like to extend their thanks to the staff and members of the National Concrete Masonry Association for assistance with conducting the demonstration and to fellow staff members at the FHWA Turner-Fairbank Highway Research Center in McLean, VA for their assistance in the design of the reaction assembly.

9 APPENDIX I. REFERENCES

Adams, M.T., 1997. "Performance of a Prestrained Geosynthetic Reinforced Soil Bridge Pier," Proceedings, International Symposium on Mechanically stabilized Backfill, Denver, Colorado, Balkema, Rotterdam, pp. 35-53.

Adams, MT., Ketchart, K., Ruckman, A., DiMillio, A., Wu, J.T.H., and Satyanarayana, R., 1999. "Reinforced Soil for Bridge Support Application on Low Volume Roads," Proceedings, Seventh International Conference on Low Volume Road, Transportation Research, No. 1652, pp. 150-160.

Elias, V., and Christopher, B., 1996. "Mechanically Stabilized Earth Wall and Reinforced Soil Slopes Design and Construction Guideline," Publication No. FHWA-SA- 96-071, Federal Highway Administration, US Department of Transportation.

Ketchart, K. and Wu, J.T.H., 1997. "Performance of Geosynthetic-Reinforced Soil Bridge Pier and Abutment, Denver, Colorado," Proceedings, International Symposium on Mechanically stabilized Backfill, Denver, Colorado, Balkema, Rotterdam, pp. 101-116.

Ketchart, K. and Wu, J.T.H., 2001. "Performance test for Geosynthetic Reinforced Soil Including Effects of Preloading" Publication No. FHWA-RD-01-018, Federal Highway Administration, US Department of Transportation

Uchimura, T., Tatsuoka, F., Tateyama, M., and Koga T., 1998. "Preloaded-Prestressed Geogrid-Reinforced soil Bridge Pier," Proceedings, Sixth International Conference on Geosynthetics, Atlanta, Georgia, pp., 565-572.

Wu, J.T.H., Kanop, K., and Adams, M., 2001. "GRS Pier and Abutments" Publication No. FHWA-RD-00-038, Federal Highway Administration, US Department of Transportation

10 APPENDIX II. NOTATION

The following symbols are used in this paper:

A_{sf} = area of spread footing
w = width of spread footing
H_o = initial height of GRS mass (pier)
W = initial width of GRS mass (pier)
L = length of GRS mass
S_v = vertical settlement
D_L = maximum lateral displacement
V_{top} = volume change at the top of GRS mass (pier)
$V_{lateral}$ = volume change due to lateral expansion of GRS mass (pier)
V_{face} = volume change due to lateral expansion on one face of GRS mass (pier)
ε_L = maximum lateral strain
ε_v = vertical strain
ε_v = applied average vertical stress